BriPower
KGS Series User Manual

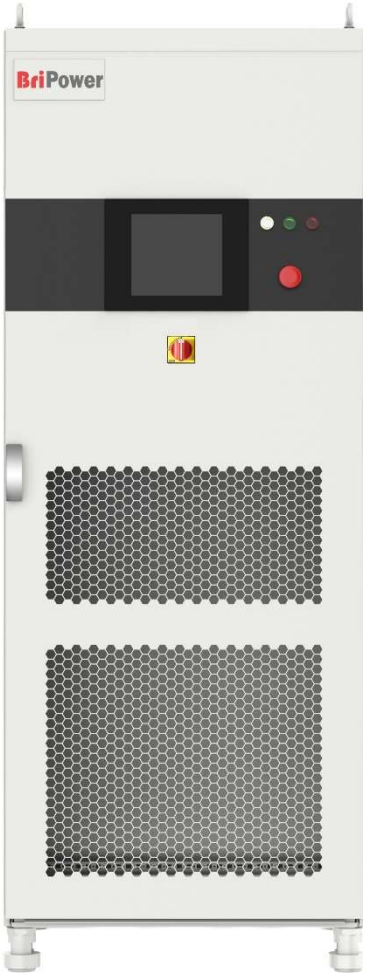

INFO & CONTACT ADDRESSES

Bridge Technology is a company focusing on business of power supplies and test systems for new energy applications. We are devoted to providing high quality products and solutions for customers.

Bridge Technology has a top-class R&D team in China, worKGS on modularization and standardization power supplies and systems. We have sales, technical support, R&D and manufacture in Shanghai, Nanjing, and Chengdu.

Nanjing Bridge New Energy Technology was founded on Jan 12th, 2016, focusing on R&D and manufacturing BriPower brand power systems, including bi-directional AC sources for grid simulation, bi-directional DC sources for battery simulation, and regenerative loads. The BriPower AC&DC power systems are widely used in new energy and related fields.

- **Nanjing Bridge New Energy Technology Co., Ltd**
  Sabo Industrial Park, Runhuai Road,Zhetang Street,Lishui District,Nanjing,Jiangsu
  General information: info@bridgetech.cn
  Technical Support: support@bridgetech.cn
  Repair &Calibration: service@bridgetech.cn
  Int'l Sales: contact@bridgetech.com.sg
  Tel: +86 25-86168994 (Nanjing)

- **Shanghai Bridge Electronic Technology Co., Ltd**
  412, Building A, No.90 Wanrongyi Road, Jing'an District, Shanghai, 200436
  Tel：+86 21-62220238 (Shanghai)
  Fax：+86-21-62220238

Legal Notices

Without the written permission and consent of Bridge Technology, No part of this manual may be used, copied, translated, modified, or transmitted in any form. All the information, instructions and illustrations provided in this manual are the latest version currently. This manual is based on the technical status at the time of printing. Bridge Technology will make every effort to ensure that the information in this manual is up-to-date and accurate. It will be modified without notice. Although there are regular controls and corrections, there may still be typographical errors or defects. Bridge Technology has no liability for any technical, typographical or translation errors in this manual. If any errors are found, please report them to us in writing.

The pictures used in this manual do not represent the pictures of the products purchased by the user. The actual products purchased by the user may be customized versions, which may not match the manual in terms of appearance, weight, and technical parameters. For specific understanding of the actual appearance and technical parameters of related products, please contact Bridge Technology.

Software Statement

ESD series provides GUI software, which is installed on the TFT-Touch panel using the Windows OS. Unless interoperability requires by law, it is prohibited to reverse program, disassemble, or decompile the software.

Date and Reversion

Date	Version	Reversion record
July, 2020	Revision 2.0	Complete the manual

Safety Requirements

Summary of safety requirements

Please read the manual thoroughly before putting the equipment into operation. Pay regard to the following safety instructions and keep the manual nearby for future purpose to avoid any damage to the equipment. To prevent potential hazards, please follow the instructions in the manual to safely use the instrument. Bridge Technology have no liability for failures caused by violate protective measures or other safety regulations.

- **Unpacking**

  Please make sure that the shipping carton and the packing is without any damage. If any external damage is found, it is important to record the type of damage. Please keep the original packing to ensure the product is adequately protected in case it needs to be transported to the factory or make a claim.

- **Surroundings**

  To avoid electrical hazards or product failure, the equipment should be installed indoor which meets the environment requirements.

- **Operator**

  The equipment operator must follow the warnings, safety instructions and accident prevention measures in the manual.

- **Visual Inspection**

  After unpacking, please immediately check whether there is any defects or damage of the equipment during transportation. If there is obvious physical damage, please do not use the equipment. Please notify the carrier and the agent of Bridge Technology immediately.

- **Power Operation**

  Please confirm the model and voltage / current rating on the nameplate before operating. Damage caused by wrong power supply is not covered by the warranty.

- **Use Suitable Cables**

  Please select the appropriate cable according to the equipment specifications of the local country.

- **Equipment Groundin**

  The equipment is grounded through the protective ground bus. To avoid electrical hazards, connect the ground terminal to the protective ground terminal before connecting any input or output terminals.

- **Appropriate Overvoltage Protection**

  Make sure that there is no overvoltage on the product (such as overvoltage caused by lightning). Otherwise, the operator may be in danger of electrical hazards.

- **Avoid Exposing Circuits or Wires**

  When the module is powered on, do not touch the exposed connectors or components.

Safety Notices and Symbols

Safety Symbols

		
SHOCK HAZARD	WARNING	PROTECTIVE EARTH TERMAINAL

Other Symbols

IMPORTANT INFORMATION

Safety Information

	**WARNING**
	If improperly operated, it may cause injury or danger immediately.
	**WARNING**
	Potentially dangerous situation or practice. If not avoided, will result in serious injury or death.
	**WARNING**
	Potentially dangerous situation or practice. If not avoided, may result in product damage or loss of important data.
	**SHOCK HAZARD**
	The risk of electrical hazards. For example: The maximum voltage of KGS series can reach 750VDC and above, which may cause personal injury or death. To avoid the risk of electrical hazards, the equipment must be firmly connected to the ground wire and other equipment wiring; within a few seconds after turning off the equipment, the high voltage at the output terminal may be maintained, and do not touch the cable or the terminal block immediately.
	**IMPORTANT INFORMATION**
	Important information when operating the equipment / software.

CONTENT

Chapter 1 Equipment Introduction

1.1 System Overview

1.1.1 Overview of KGS series

1.1.2 Model description

1.1.3 Features and configuration

1.1.4 General specification

1.2 Appearance and Structure of Equipment

1.2.1 Appearance and outline

1.2.2 Front panel

1.2.3 Rear panel

1.2.4 Internal structure

1.2.5 Control module of front panel

1.2.6 Connection layer and other interface layers

1.3 Interface Description

1.3.1 LAN interface (standard)

1.3.2 RS485 interface (standard)

1.3.3 RS232 interface (232 option)

1.3.4 TTL interface (standard)

1.3.6 External emergency stop interface (standard)

1.1 System Overview

1.1.1 Overview of KGS series

The BriPower KGS series is a high-performance AC/DC power source, using SiC MOSFET PWM technology, which contains multi output power levels from 15kVA to 500kVA. With an output frequency range from DC to 2kHz (standard 1kHz, 2kHz with -HF option), standard output 300V L-N (higher voltage can be customized). KGS series uses bi-directional design, which makes it possible to be used as grid simulator to test distributed generation systems. KGS Series is well suited for aerospace applications. Remote control interfaces and SCPI command language are provided for easy integration into ATE systems. With touch panel on the front panel, user can control the power source with GUI software. System status indicators and emergency stop button are also installed on the front panel. Programming interfaces including LAN and RS485 interfaces are standard, and optional RS232, analog control interfaces are available for automated test applications.

1.1.2 Model description

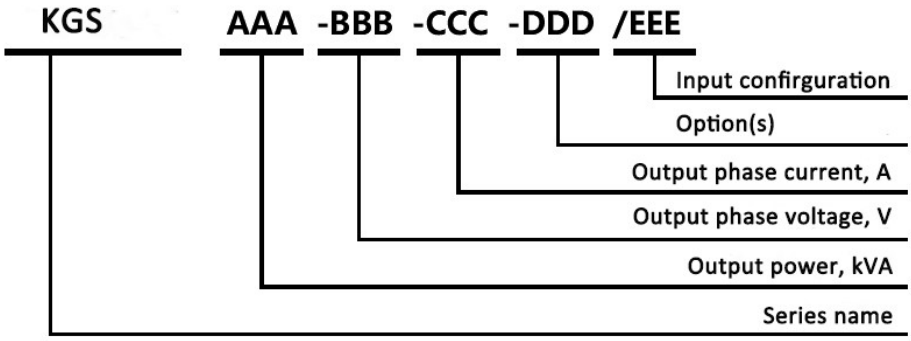

1.1.3 Features and configuration

- Single system up to 500kW, and parallel system up to 2MW
- Modular design, output power from 15kVA to 500kVA
- Bi-directional power source, seamless transition between source and sink modes
- Output: AC, DC, AC+DC
- Use true current feedback control when working in CC mode
- Frequency Range: DC~ 1kHz (-HF option: DC~2kHz)
- Standard output 300V L-N (higher voltage can be customized)
- Up to 40th harmonic waveform generation, inter-harmonic generation
- Triger out, TTL signal output for voltage or frequency change
- AC output, ON and OFF output phase angle can be programmed
- LAN/RS485 interfaces (standard), RS232/Analog control interface (optional)
- Emergency stop button and indicators on front panel
- TFT-Touch panel operation
- Mod-bus/SCPI protocols

- CE conformity
- Provide customized solutions

1.1.4 General Specification

AC input	
Voltage	3P+N+PE, 380VLL±10%(std)
Frequency	47-63Hz
Efficiency	≥85%
Power Factor	0.95
Output	
Output Modes	AC, DC, or AC+DC
Power Level	From 15kVA to 500kVA
Output Voltage Load Regulation	0.2%FS
Output Voltage Line Regulation	0.1% (10% input line change)
AC Output	
Voltage Range (L-N)	0-300V (std), higher voltage can be customized
Current Range	Max 50A per 15kVA module
Phase Angle Range	Phase B/C relative to phase A, 0.0~360.0°
Frequency Range	DC -1000Hz (std), DC -2000Hz (-HF option)
THD	<1% (Resistive Load)
Harmonic Generation	Up to 40th
Voltage Slew Rate	5V/us
Power Accuracy	0.5%FS
Voltage Accuracy	0.5%FS
Current Accuracy	0.3%FS
Frequency Accuracy	0.01%FS+0.01Hz
Phase Angle Accuracy	<1.2° (@50Hz)
Power Resolution	0.01kW
Voltage Resolution	0.1V
Current Resolution	0.01A
Frequency Resolution	0.01Hz (~100Hz), 0.05Hz (>100Hz)
DC Output	

Voltage Range	0-550V (Std), customized voltage up to 1125V
Current Range	Max 25A per 15kVA module
Voltage Accuracy	0.2%FS
Current Accuracy	0.1%FS
Voltage Ripple	0.1%FS
AC+DC Mode	Max Power, Voltage and Current are the same as DC Mode
AC Voltage Measurement Accuracy	0.5%FS
AC Current Measurement Accuracy	0.3%FS
DC Voltage Measurement Accuracy	0.2%FS
DC Current Measurement Accuracy	0.1%FS
Frequency Measurement Accuracy	0.01%+0.01Hz
Others	
Protection	OVP, OCP, OTP
Regulatory	CE Conformity
Cooling	Forced Air Cooling
Temperature	Operating: 0~40℃ Storage: -20~85°C
Operating Humidity	20-90%RH (None Condensing)

Model	**KGS 15**	**KGS 45**	**KGS 90**
AC Output Mode	Single Phase	Single Phase or Three Phases	
AC Output Power	15kVA	45kVA	90kVA
AC Output Current	50A	50A/ph	100A/ph
DC Output Power	10kW	30kW	60kW
DC Output Current	25A	75A	150A
Dimension (W*D*H mm)	800*900*1700	800*900*1700	2*800*900*1700
Weight	<500kg	<550kg	<950kg

1.2 Appearance and structure of Equipment

1.2.1 Appearance and outline

The overall appearance of the KGS (take KGS 45-300-50 as an example) is shown in Figure 1-1. There are lifting rings at the top of the cabinet for lifting operation, and moving rollers at the bottom of the cabinet, which for users to move flexibly. There are TFT-Touch panel displayer (12 inch), status indicator, power knob, emergency stop button and RS232 interface (optional) on the front panel, product brand, RS485 and LAN interface (standard), TTL interface (standard), ATI interface (optional) which is for automated test applications on the rear panel.

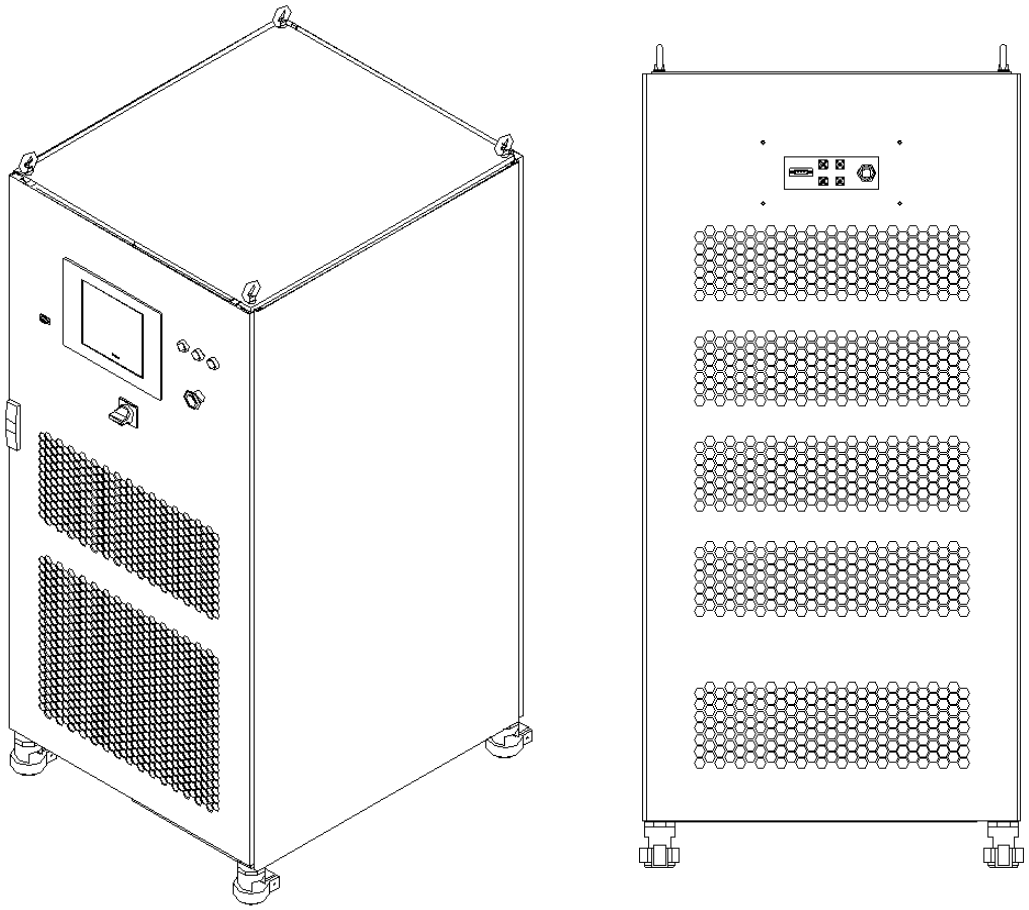

Figure 1-1 Overall appearance

1.2.2 Front Panel

The front panel of KGS series is equipped with a TFT-Touch panel displayer (12 inch), status indicator, power knob, emergency stop button and RS232 interface (optional).

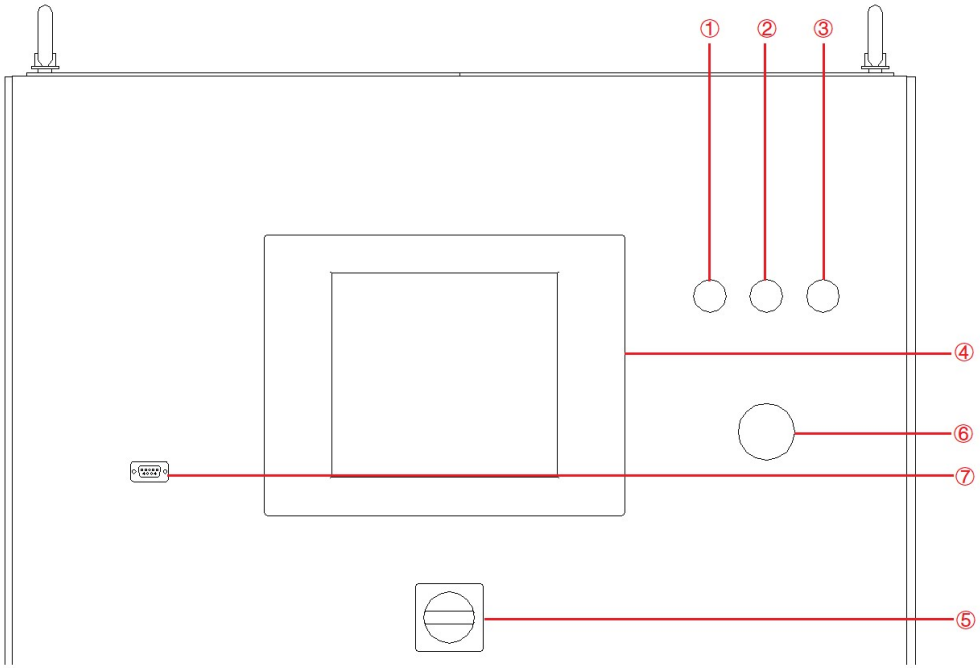

Figure 1-2 Front panel

Table 1-1

Number	Name	Notes
①	**White Light**	The power supply is standby.
②	**Green Light**	The power supply is operating normally.
③	**Red Light**	The power is failure.
④	**TFT-Touch Panel**	Capacitive TFT touch panel displayer (12 inch), using the windows OS., provides a GUI, and has the functions of setting system parameters, output parameters, measurements, capturing and saving Waveform, and displaying failures.
⑤	**Power Knob**	The User can use power knob to turn on / off the power without opening the cabinet door. Turn the control module clockwise to power on; and turn the control module counterclockwise to power off.
⑥	**Emergency Stop Button**	The emergency stop button is only used in the event of an emergency. Do not press the button under normal working conditions. Turn the emergency stop button clockwise to the right can cancel the emergency braking.
⑦	**RS232 interface**	Optional, for remote control (-232 option)

1.2.3 Rear panel

The rear panel of KGS series is equipped with RS485 / LAN interface (standard), TTL interface and ATI interface (optional).

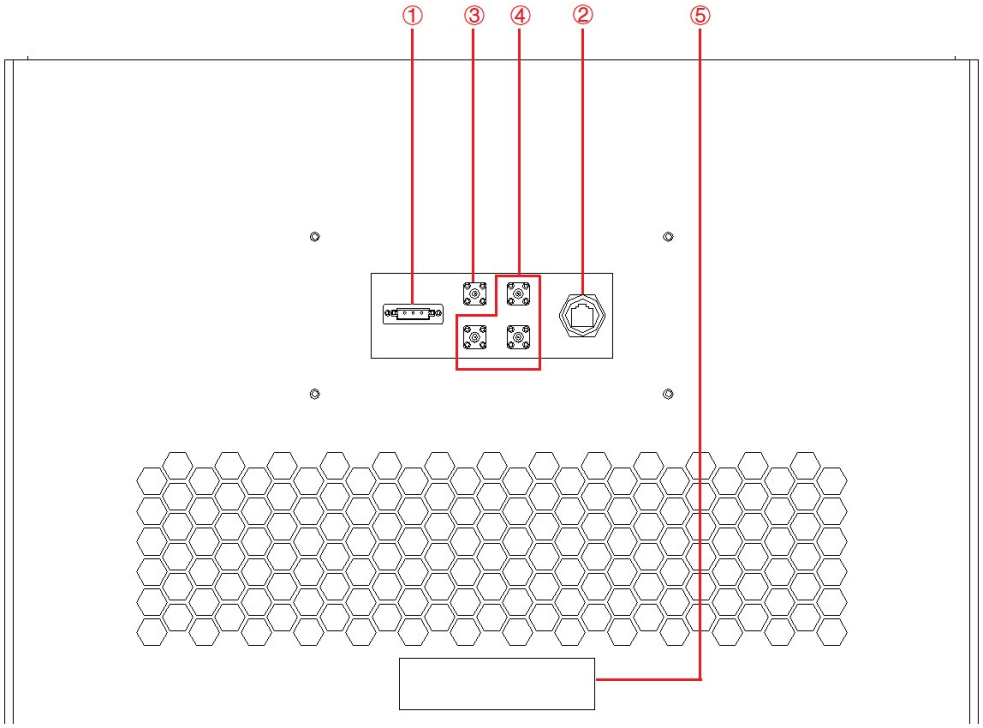

Figure 1-3 Rear panel

Table 1-2

Number	Name	Note
①	**RS485 interface**	Standard configuration, is used for remote control.
②	**LAN interface**	Standard configuration, it is a communication interface, and used for remote control.
③	**TTL**	Standard configuration, for users to observe the trigger signal after connecting with the oscilloscope
④	**ATI interface**	a. Analog control interface-Phase A b. Analog control interface-Phase B c. Analog control interface-Phase C Optional, analog control interface (-ATI option)
⑤	**Product brand**	The input / output configuration of the product is marked.

1.2.4 Internal structure

As shown in Figure 1-4, take KGS 45-300-50 as an example, from top to bottom, the internal modules of KGS series are: ①control box layer, ②③module layer, ④component layer, wiring layer and other interface layers.

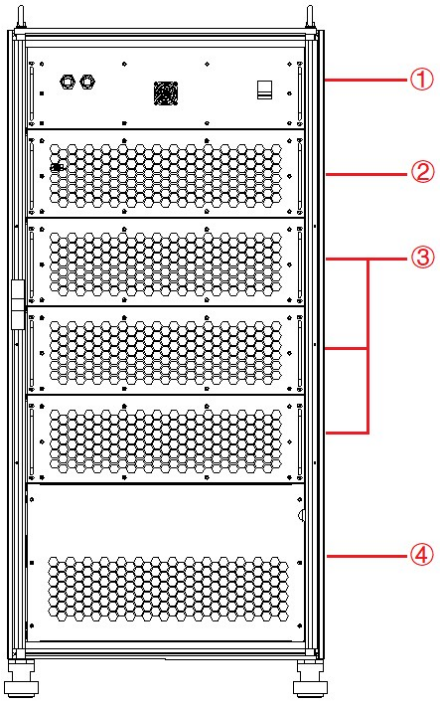

Figure 1-4 Internal structure

1.2.5 Front panel of control module

The front panel of KGS series control module is equipped with LAN interface (standard), fan and power switch.

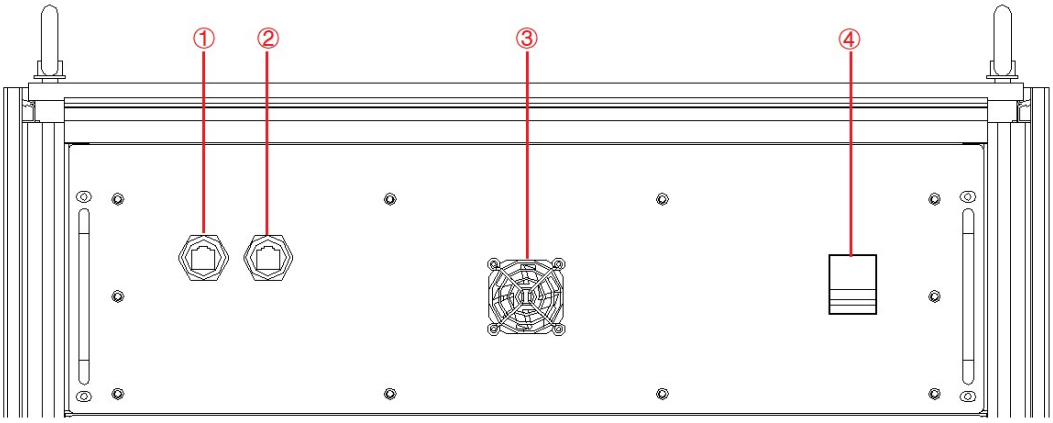

Figure 1-5 Front panel of control module

Table 1-3

Number	Number	Notes
①	**LAN interface**	Standard, for touch screen communication
②	**LAN interface**	Standard, for debugging and firmware update
③	**Fan**	For control module heat dissipation
④	**Power switch**	For the power on / off the control module

1.2.6 The component layer, connection layer and other interface layers

The power input/output wiring copper bar, 220V auxiliary terminal, external emergency stop interface and others are showed when remove the bottom baffle, as shown in Figure 1-6.

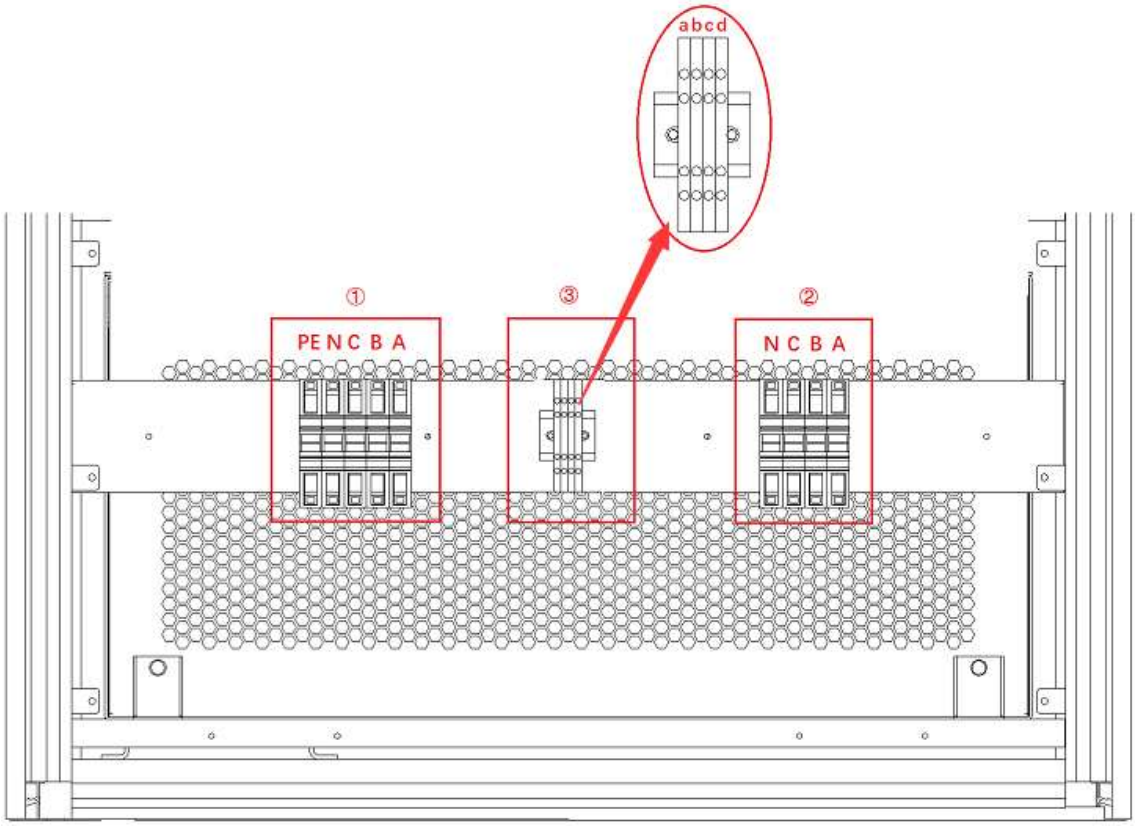

Figure 1-6 Power input / output connection layers

Table 1-4

Number	Name	Notes
①	**Wiring copper bar of input side**	From left to right are PE, N, C, B, A
②	**Wiring copper bar of output side**	From left to right are N, C, B, A
③	**Other terminals**	a + b → Control module 220V auxiliary power terminals (+, -) (No need to wire)
		c + d → External emergency stop interface (+, -)

IMPORTANT INFORMATION

This manual takes KGS 45-300-50 as an example, when input/output current is less than 100A, and the terminal shown in the figure is used. When input/output current is greater than 125A, the input/output terminals are changed to copper bars (the phase sequence remains unchanged).

1.3 Interface Description

1.3.1 LAN interface (standard)

The LAN interface is one of the equipment communication interfaces.

1.3.1.1 Location of LAN interface

The two LAN interfaces on front panel of the control module are used for touch panel communication (Figure 1-7①) and hardware debugging (Figure 1-7②).

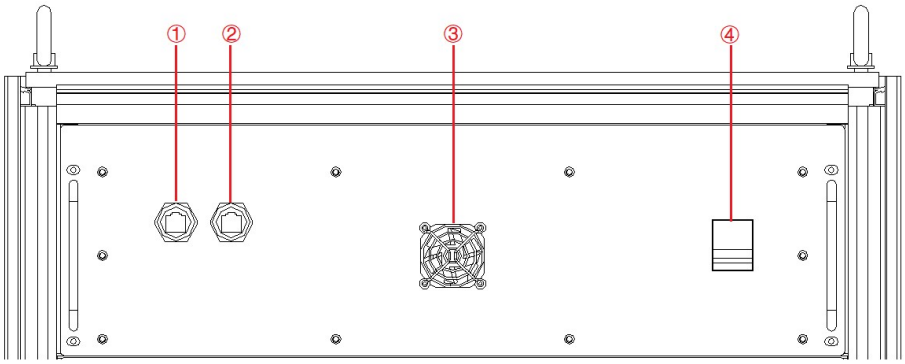

Figure 1-7 front panel of the control module

IMPORTANT INFORMATION

The LAN interface (Figure 1-7①) is connected to the touch panel by default before shipment. Do not remove it without permission. The interface (Figure 1-7②) is used for debugging before shipment. Do not use it without permission.

The LAN interface located on the rear panel is used for remote control of equipment (Figure 1-8②).

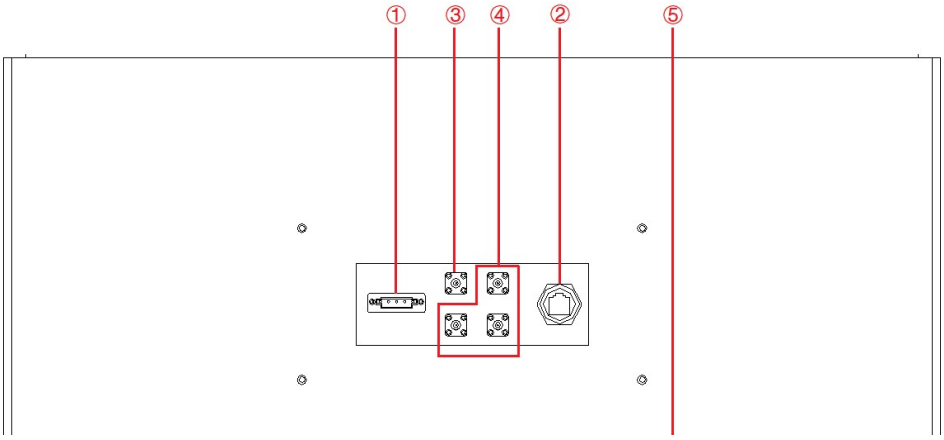

Figure 1-8 Rear panel

1.3.1.2 Connection of LAN interface

The detail information of LAN connection is in 5.2.

IMPORTANT INFORMATION

The network wire used for LAN connection is Straight-Through Wired Cable.

1.3.1.3 Remote control setting

The detail information of remote control setting is in 5.2.

1.3.2 RS485 interface (standard)

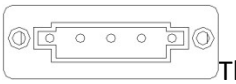

The RS485 interface is one of the equipment communication interfaces, it is used for remote control, and can effectively transmit signals under long-distance conditions and in environments with high electronic noise. RS485 interface makes it possible to connect to local network and configure multi-drop communication link.

1.3.2.1 Location of RS485 interface

The RS485 interface is located on the rear panel of power supply (Figure 1-9①).

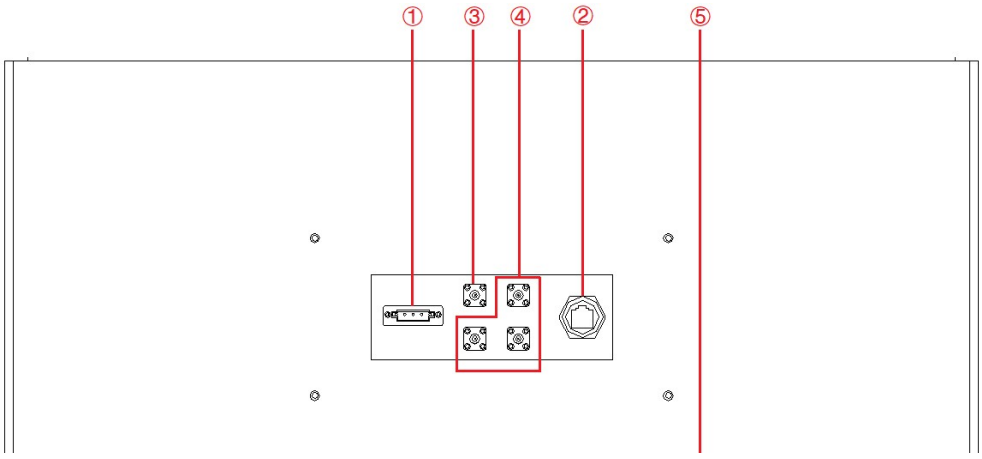

Figure 1-9 Rear panel

1.3.2.2 Connection of RS485 interface

The RS485 interface of KGS series adopts "two-wire + signal ground" wiring. In low-speed, short-distance, non-interference occasions, ordinary twisted-pair wire can be used. Conversely, in high-speed and long-line transmission, RS485 special cable (STP-120Ω 18 AWG) (one pair) with

impedance matching (generally 120Ω) must be used. In the environment with severe interference, armored twisted pair shielded cable (ASTP-120Ω 18AWG) (one pair) should also be used. The connection method is shown in Figure 1-10.

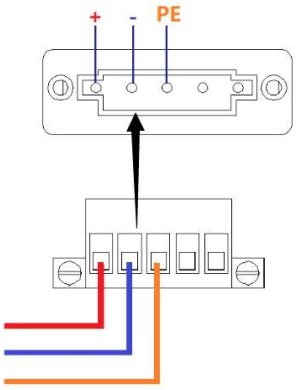

Figure 1-10 Connect RS485

<u>The port setting information:</u>

Port:	COM port on control PC
Baud Rate:	9600
Data Bits:	8
Stop Bits:	1
Parity:	None
Flow control:	None

1.3.3 RS232 interface (-232 option)

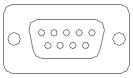
RS232 is one of the equipment communication interfaces for remote control. The standard value of RS232 maximum transmission distance is 15 meters and it can only communicate point to point.

1.3.3.1 Location of RS232

The RS232 interface is located on the front panel of power supply (Figure 1-11⑦).

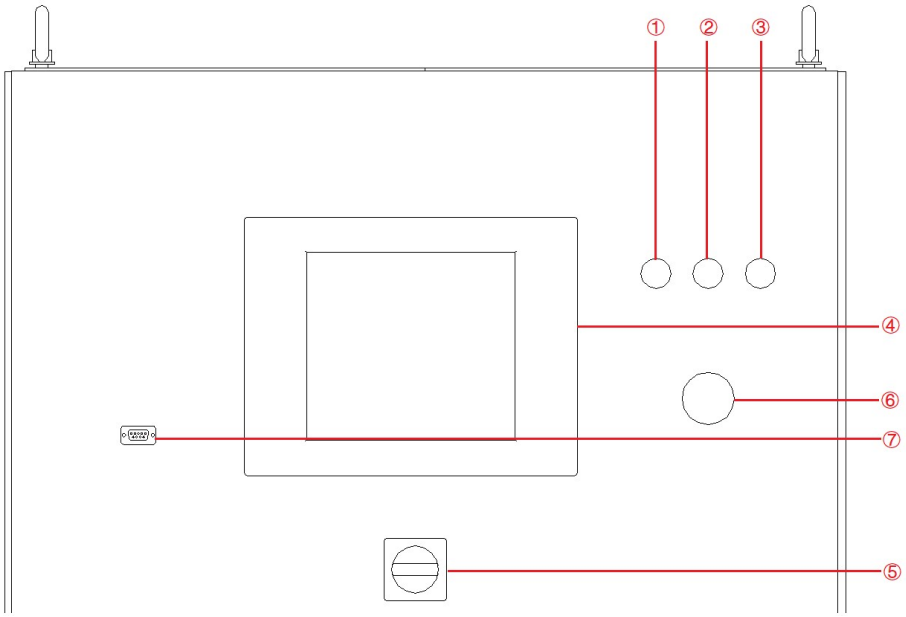

Figure 1-13 Front panel of the power supply

1.3.3.2 Connection of RS232 interface

The RS232 interface usually appears in the form of 9 pins (DB-9). Under normal circumstances, two RS232 interfaces, one male and one female, can be used by directly plugging in the interconnect. The meaning of the pins is as follows. Baud rate is 9600, stop bit is 1.

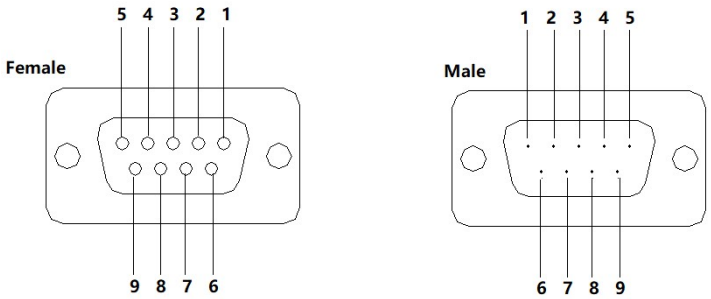

Figure 1-12 RS232 pin

Table 1-5

Pin	Definition	Symbol	Signal transmission direction
1	Data Carrier Detect	DCD （Data Carrier Detect）	←
2	Received Data	RXD （Received Data）	←
3	Transmit Data	TXD （Transmit Data）	→
4	Data Terminal Ready	DTR （Data Terminal Ready）	→

5	Signal Ground	SG （Signal Ground）	-
6	Data Set Ready	DSR （Data Set Ready）	←
7	Request To Send	RTS （Request To Send）	→
8	Clear To Send	CTS （Clear To Send）	←
9	Ring Indicator	RI （Ring Indicator）	←

<u>The port setting information:</u>

Port:	COM port on control PC
Baud Rate:	9600
Data Bits:	8
Stop Bits:	1
Parity:	None
Flow control:	None

1.3.4 TTL interface (standard)

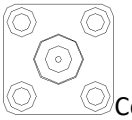

Connect the TTL interface to the oscilloscope. When the voltage/frequency changes, the user can observe the TTL signal level changes through the oscilloscope Waveform.

1.3.4.1 Location of TTL interface

The TTL interface is located on the rear panel of power supply (Figure 1-13③).

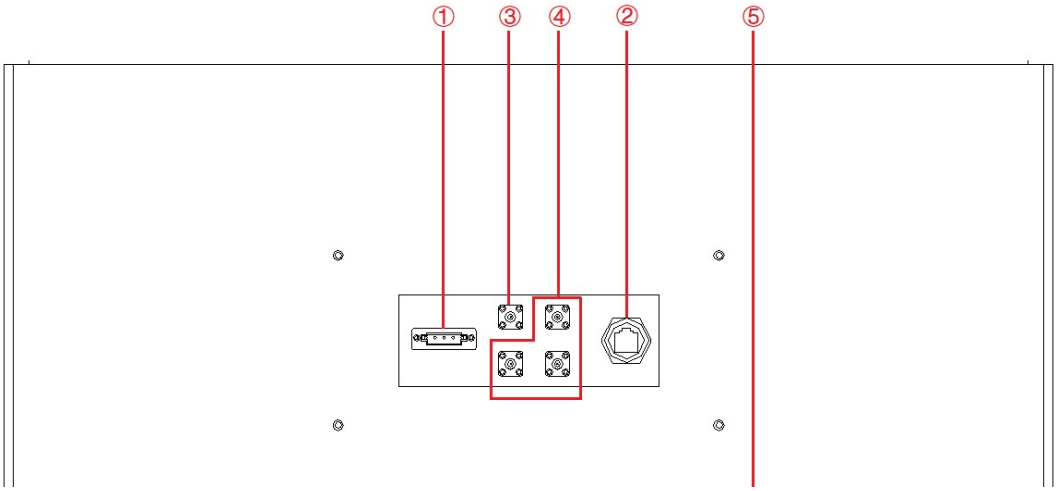

Figure 1-13 Rear panel

1.3.4.2 Connection of TTL interface

Figure 1-14 Connect TTL interface

1.3.5 ATI Interface (-ATI option)

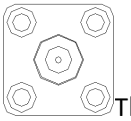

The output voltage of power supply can be controlled via control signals and by using the analog input (ATI interface). KGS uses BNC connector for this analog input.
Set points are adjusted as dc voltage (0-5 V) on the analog input.

1.3.5.1 Location of ATI interface

The AIT interface is located on the rear panel of power supply (Figure 1-15④).

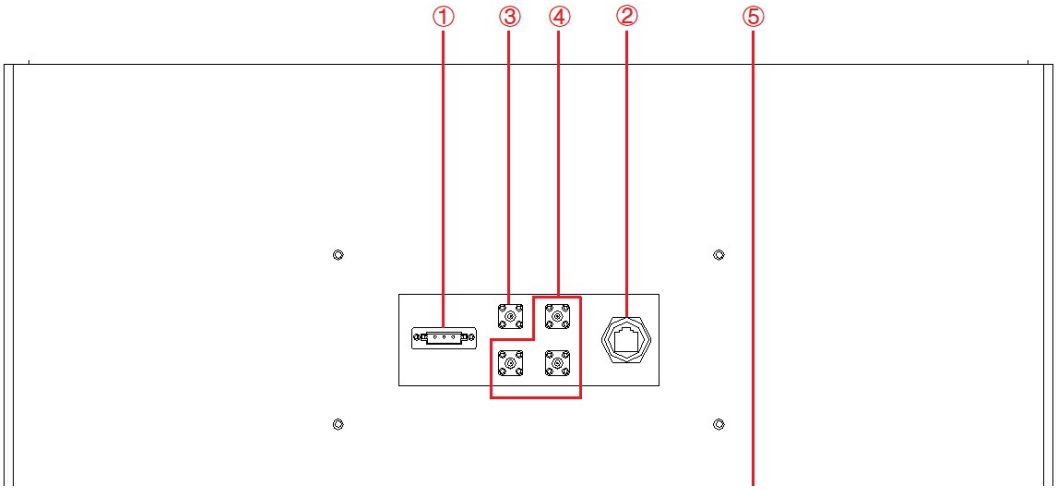

Figure 1-15 Rear panel of power supply

1.3.5.2 Connection of ATI interface

The ATI interface of the KGS series appears as BNC. The connection between the equipment and the signal generator is shown in Figure 1-16.

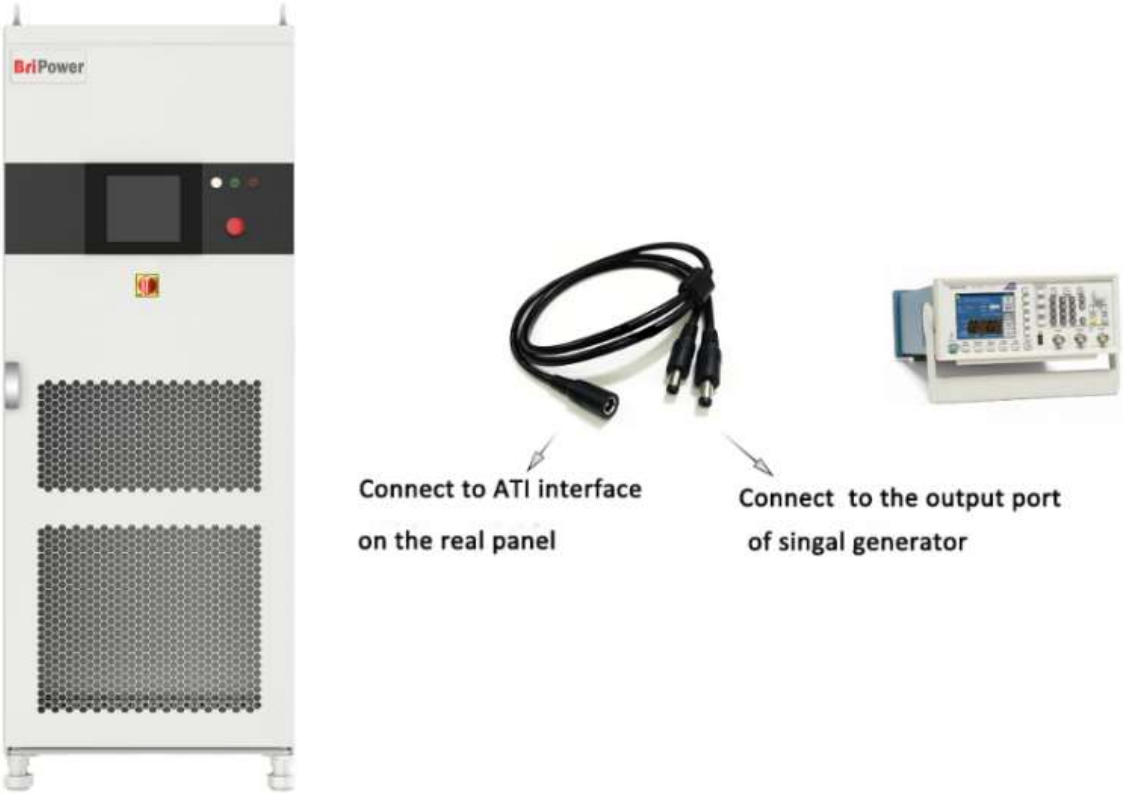

Figure 1-16 Connect ATI interface

1.3.6 External emergency stop interface (standard)

The KGS series provides an external emergency stop interface, which can be connected to the user's external emergency stop switch. When an emergency occurs, the user does not need press the emergency button on power supply. To achieve protection action quickly, only need to press this switch.

1.3.6.1 Location of emergency stop interface

The External emergency stop interface is located in the wiring layer inside the power supply-③: c, d（Figure 1-17）.

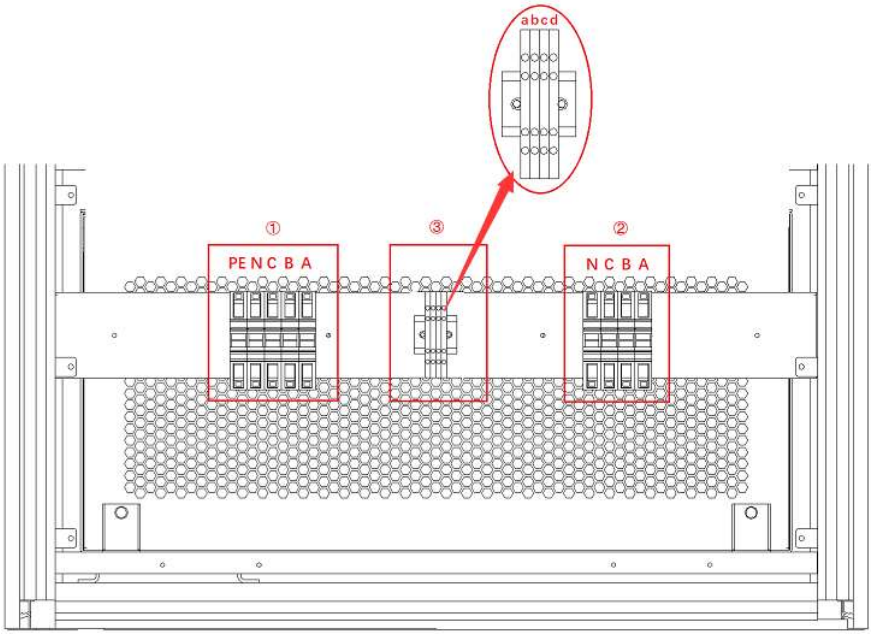

Figure 1-17

1.3.6.2 Connection of emergency stop interface

The wiring method external emergency stop is shown in Figure 1-18.

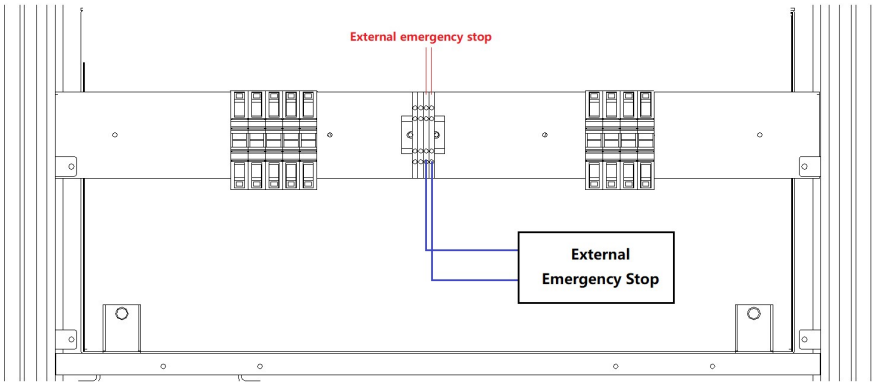

Figure 1-18 Connect emergency stop interface

Chapter 2 Equipment Installation

2.1 Check before Installation

2.1.1 check the packing

2.1.2 check the equipment

2.2 Equipment Installation

2.2.1 Selection of input/output cables

2.2.2 Installation steps

2.2.3 Add single-phase output (-1P option)

2.1 Check before Installation

2.1.1 Check the packing

when receiving the power supply of KGS series, if the packing is damaged, do not dispose the damaged packing or cushioning materials before checking the integrity of the goods and electrical/mechanical testing. The shipper/carrier should be responsible for product damage caused by the shipment. The factory has no liability for free repair/rework or replacement of products. Please keep the packing box and packing materials and record the type of damage to return the power supply.

2.1.2 Check the equipment

Open the outer packing of the power supply, and check with visual inspection or hand feeling when the power supply is in non-working. To ensure:

- There are no serious appearance defects caused by product assembly, and there are no bad phenomena such as assembly seams and breaKGS that exceed specifications.
- There are no defects that seriously affect the appearance of the product, such as scratches, indentation, color difference, paint drop, etc.

IMPORTANT INFORMATION

If the product has any mechanical damage, missing parts, fails electrical or mechanical tests, please contact the sales agent of Bridge Technology.

2.2 Equipment Installation

2.2.1 Selection of input/output cables

Before installing the equipment, the user should confirm the model on the nameplate, select cables of appropriate specifications according to the equipment input/output voltage and current rating of the equipment. If the input/output current is greater than 125A, it is necessary to select the appropriate specifications of the cold end (as shown in Figure 2-1), crimp the input side cable and the output side cable.

Figure 2-1 Cold-pressed terminals

WARNNING

If the equipment is disassembled and installed at a low temperature, water droplets may condense. The cabinet must be dry completely before installing the product, otherwise, there is a risk of electrical hazards and damage to the product.

2.2.2 Installation steps

Step 1:

Remove the bottom baffle (Figure 2-2), the user can connect the PE, N, C, B, A cables on the input side and N, C, B, A cables on the output side into the cabinet through the input side cable entrance hole① and the output side cable entrance hole②, which are at the bottom of the cabinet (Figure 2-3).

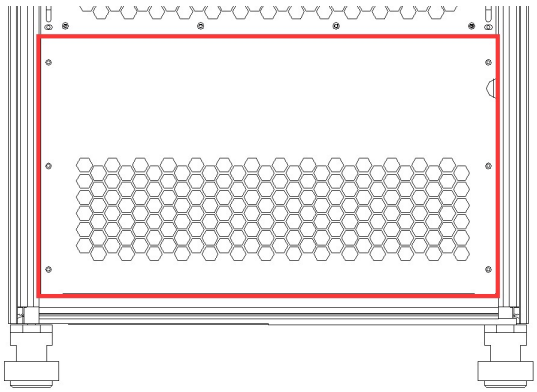

Figure 2-2 bottom baffle.

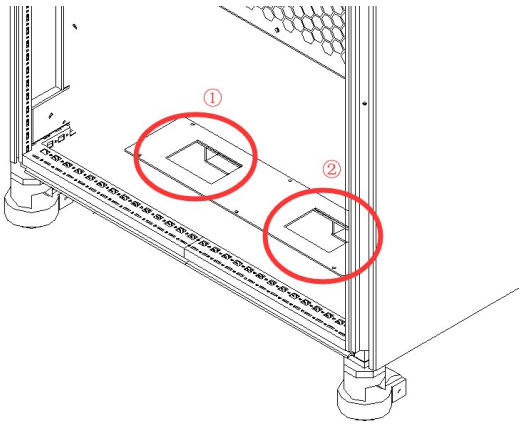

Figure 2-3 Entrance hole

Step 2:

The copper bars (PE / N / A / B / C) on the input side and the copper bars (DC + / DC-) for the DC connection on the output side are shown in Figure 2-4. The cables are connected to wiring terminal through the inlet hole at the bottom.

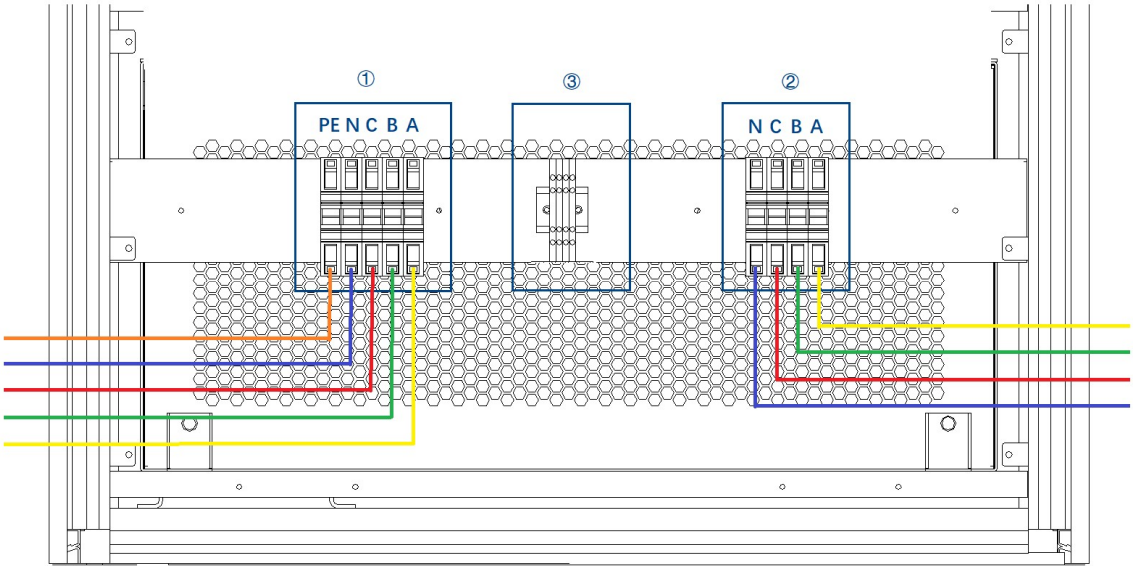

Figure 2-4 Copper bar

CAUTIOUS

To avoid electrical hazards, connect the ground terminal to the protective ground terminal before connecting any input or output terminals.

SHOCK HAZARD

Before connecting the cable, make sure that the upper-level switch is off. Do not live working.

IMPORTANT INFORMATION

Taking KGS 45-300-50 as an example, if the input/output current is less than 100A, and the terminal shown in the figure is used. When the input/output current is greater than 125A, the input/output terminals are changed to copper bars (the phase sequence remains unchanged), and the user needs to select the appropriate specifications of the cold-pressed end and crimp the input/output cable.

Step 3:

After completing the above work, the wiring status of power supply is shown in Figure 2-5. Restore the bottom baffle on the front side, close the cabinet door, then, the equipment installation is complete.

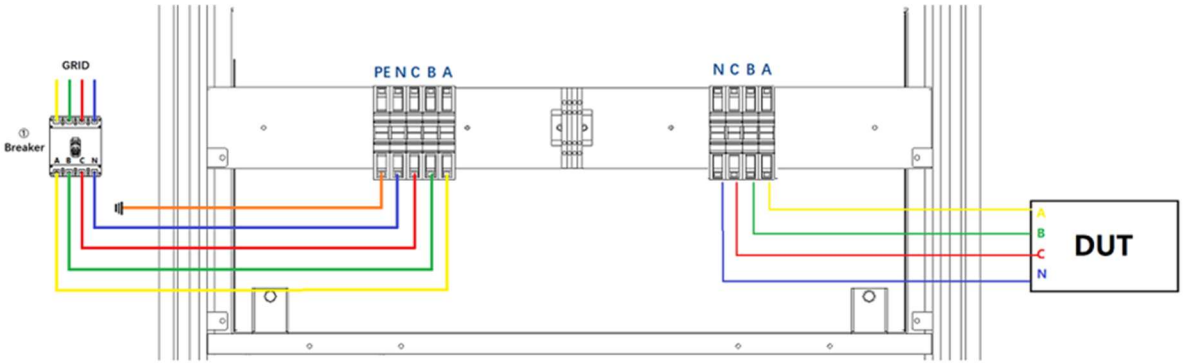

Figure 2-5 Equipment wiring completion status

2.2.3 Add single-phase output (-1P option)

The KGS series with the -1P option adds a single-phase output function. By changing the wiring method (parallel three-phase output terminals, as shown in Figure 2-6), the output current can be increased to three times the single-phase current.

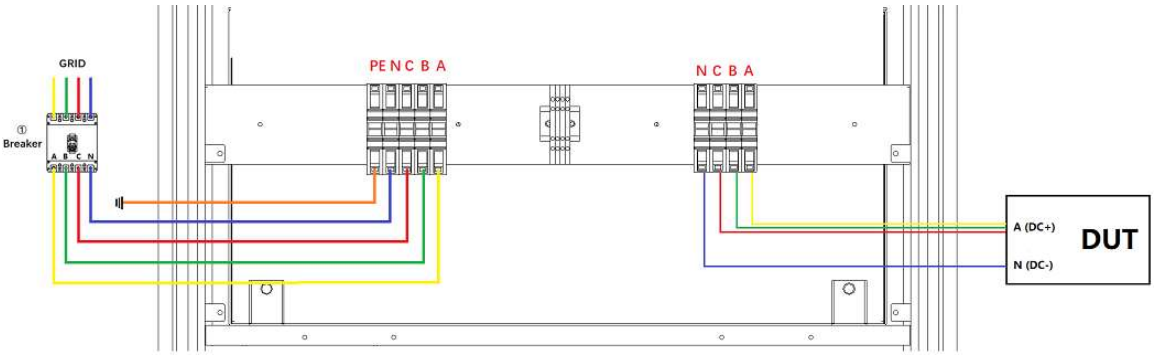

Figure 2-6 Increase single-phase output

Chapter 3 Power-on Operation

3.1 Power-on Operation

3.2 GUI Software Operation (Local Control)

3.3 GUI Software Operation (Remote Control)

3.4 Power-off Operation

3.1 Power-on Operation

Step 1: Power on the AC input side

After completing the installation, close the circuit breaker on the distribution side (Figure 3-1①).

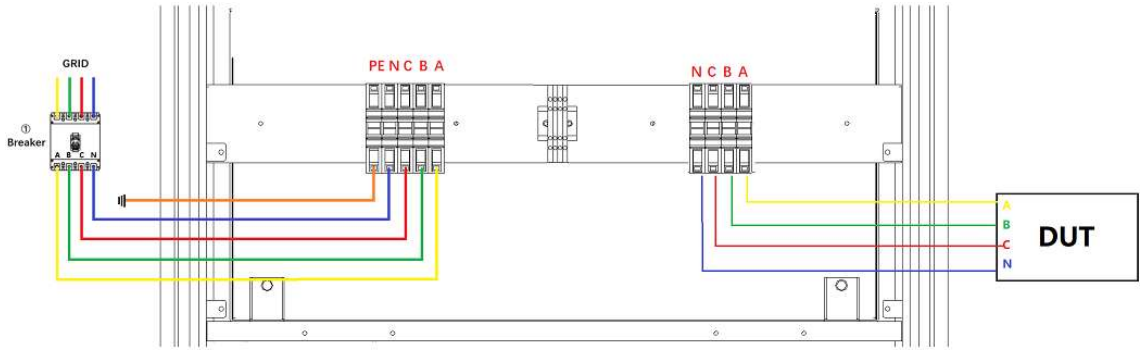

Figure 3-1 Equipment and the circuit breaker (Default AC output)

CAUTIOUS

To prevent any damage to the equipment, make sure to confirm the correct wiring sequence.

SHOCK HAZARD

The maximum voltage generated by KGS series product can reach to 750V, which could result in personal injury or death. When power is on, do not touch exposed connectors or components. Make sure that there is no overvoltage on the product (such as overvoltage caused by lightning), otherwise there may be a risk of electrical hazards.

SHOCK HAZARD

Make sure that there is no overvoltage on the product (such as overvoltage caused by lightning), otherwise there may be a risk of electrical hazards.

Step 2: Power on the control unit

After the AC input side is powered on, open the cabinet door, close the power switch of the control module (Figure 3-2④), power to the product control module.

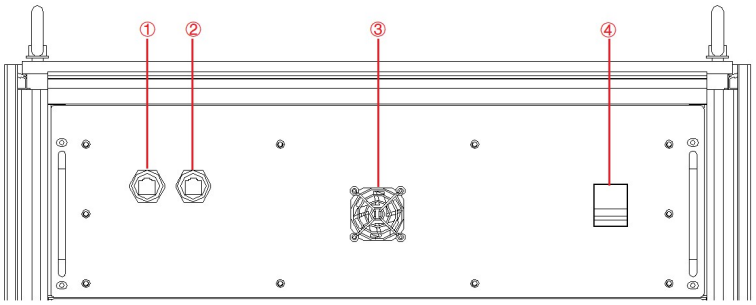

Figure 3-2 Control Modules

Step 3: Turn on power knob

Turn clockwise to close the control switch on front panel (figure 3-3⑤) after closing the cabinet door, the power supply is standby. If the power supply communication connection is normal, the white light is always on (figure 3-3①).

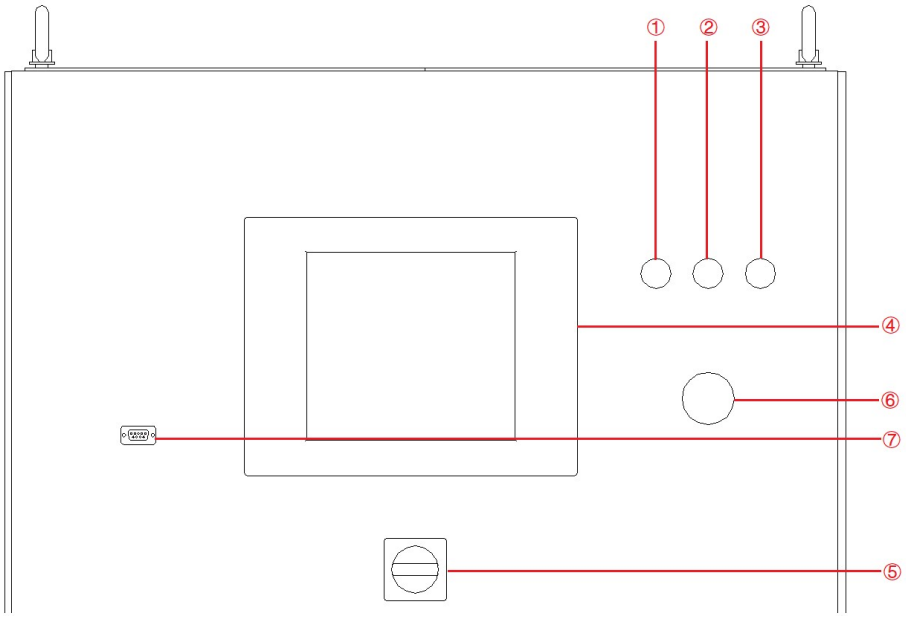

Figure 3-3 Front Panel

3.2 GUI Software Operation (Local Control)

KGS series provide GUI software, it is installed in the touch panel, which uses windows OS. (the software can also be installed on the control PC connected to the power supply).

A few seconds after the power is initialized, the control unit and touch screen work, the power supply is standby. If the power supply communication is normal, the white light (Figure 3-4①) is always on, and the "Connect" indicator on the touch screen software interface is green (Figure 3-5).

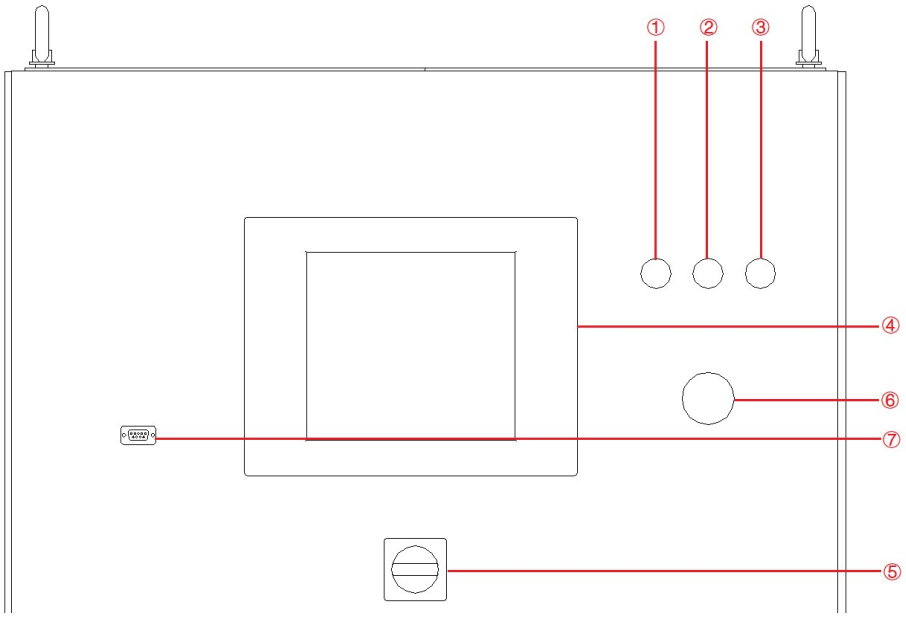

Figure 3-4 Front Panel

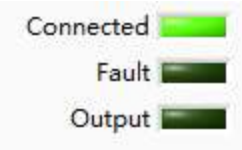

Figure 3-5 Indicators of Touch screen software

All functions and parameters can be set and run through the touch screen displayer. The software has the following functions:

- Output settings and limits
- Sequence output settings

  Including working mode, output power, output voltage, output current, duration, switching time settings, storage, and re-import of complex sequences; editing of harmonics and inter-harmonics; on/off phase angle
- Display measurements: voltage, current, power, etc.

  Real-time display of input/output voltage, current, power and IGBT temperature and other parameters
- Capture, display and save output voltage and current Waveforms.
- Display power source faults

The specific functions of the software will be introduced in chapter 4.

3.3 GUI Software Operation (Remote Control)

The detail information is in 5.2.

3.4 Power off Operation

Step 1: Close the GUI software on the TFT-Touch panel displayer/PC and shut down.

Step 2: Turn the power knob counterclockwise (Figure 3-9⑤).

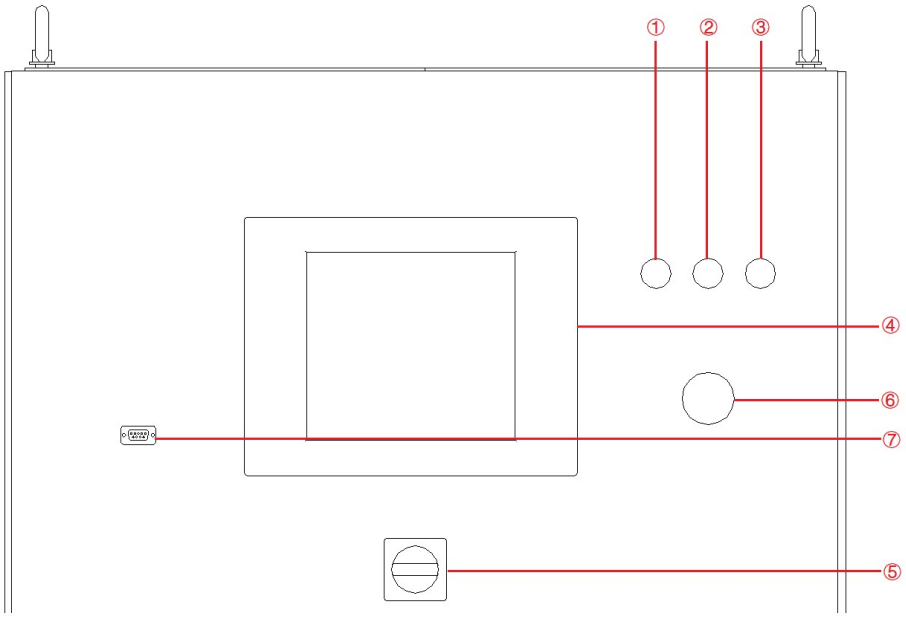

Figure 3-9 Front panel

Step 3: Open the cabinet door and power off the control unit switch (Figure 3-10④).

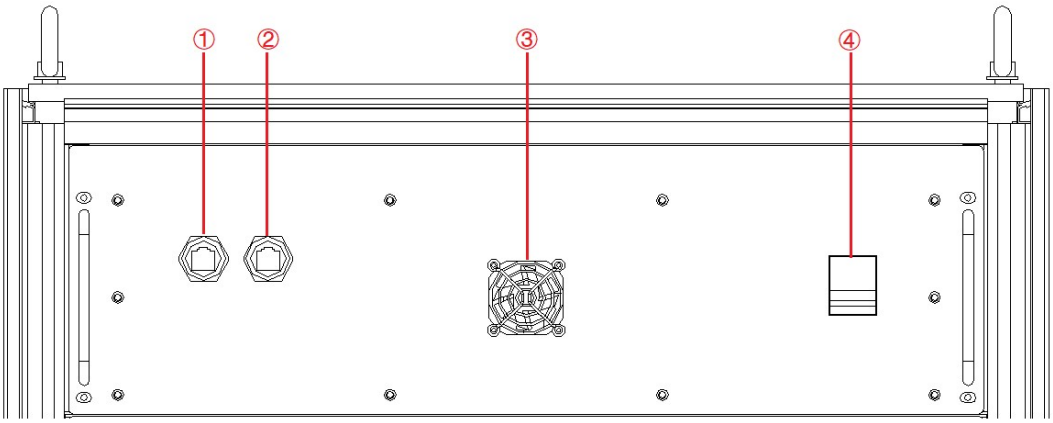

Figure 3-10 Front panel of control module

IMPORTANT INFORMATION

Closing the switch on the front panel of the control box at the first time. This step can be ignored when the power is off, it will always remain closed. when the power

supply is turned on, the step of closing the switch can be omitted, which is convenient for users to operate.

Step 4: Power off circuit breaker of the AC input side (Figure 3-11①).

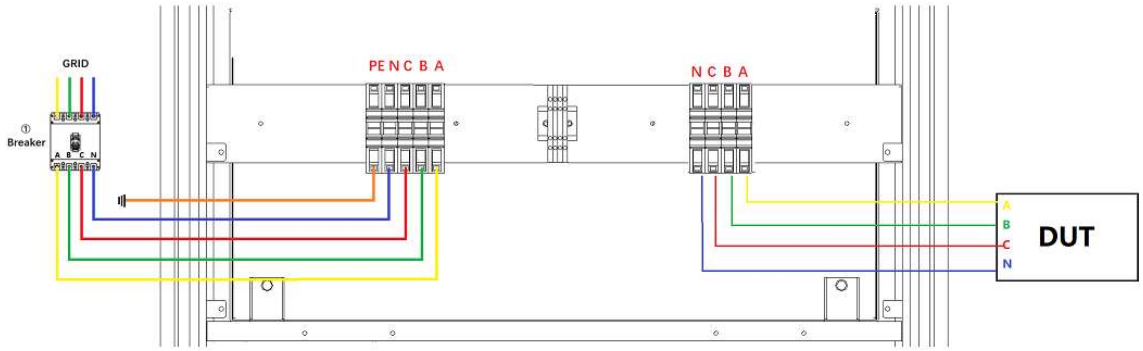

Figure 3-11 (Default AC output)

Chapter 4 Function and Feature Introduction

4.1 Grid Simulation Function

4.2 Constant Current Output Function

4.3 AC+DC/AC/DC Output

4.1 Grid Simulation Function

KGS series uses bi-directional design, and can be used as grid simulator to test distributed generation systems, such as the electrical characteristics of energy storage PCS, PV inverter, etc. The simulation functions include voltage and frequency fluctuation, voltage drop, low/zero voltage, three-phase unbalance, harmonic and inter-harmonic etc.

In the sequence mode, the user can set the output phase voltage, angle, frequency, on/off phase angle, dwell time and switching time of the power supply according to the test requirements.

The output voltage/current/power of the power supply will be displayed in real time.

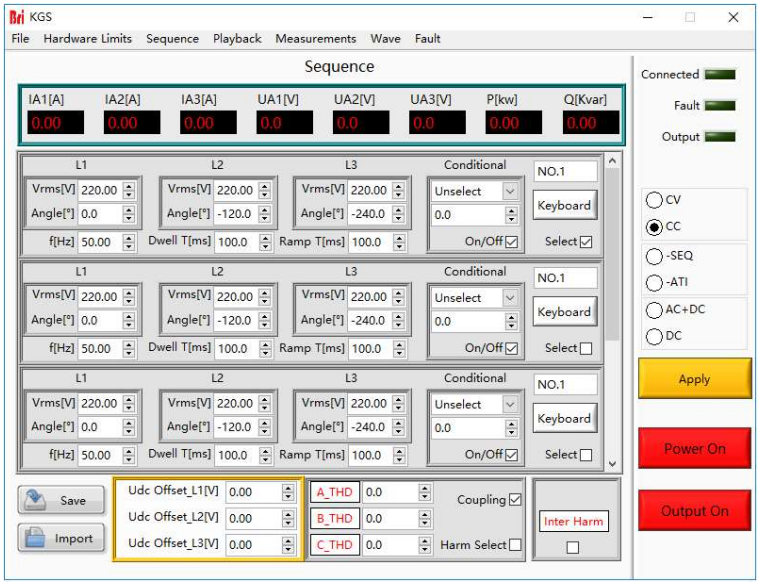

Figure 4-1 Sequence mode panel

In the sequence mode, there is a TTL trigger signal output when voltage or frequency changes, which is easy for the oscilloscope to capture the Waveform.

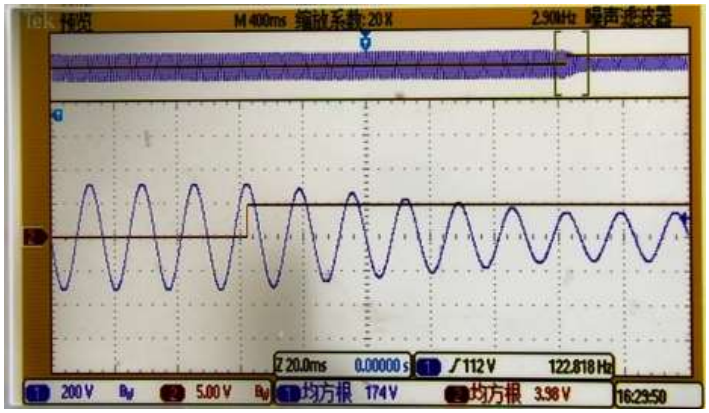

Figure 4-2 TTL trigger Waveform

During the test, the user can monitor the operating parameters of the power supply in real time on the measurement panel, such as input current/voltage, output current/voltage/power, etc.

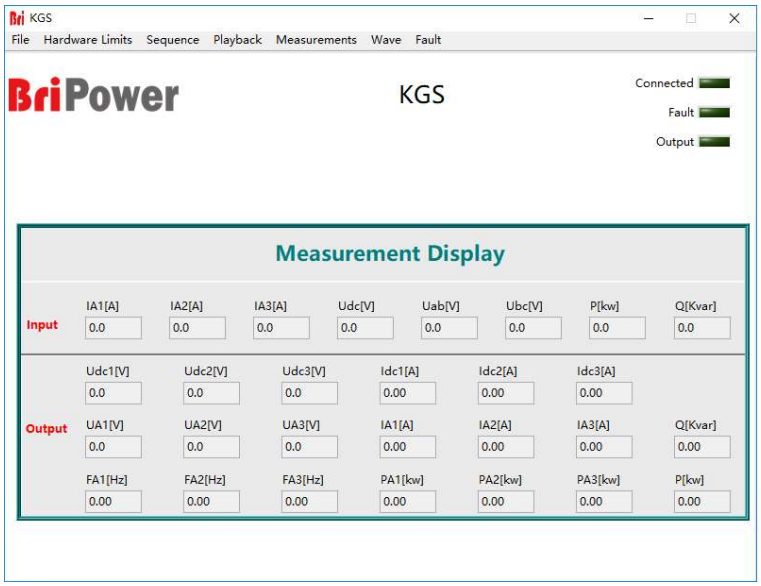

Figure 4-3 Measurements panel

KGS series can also capture, display, and save the output voltage and current Waveforms and store them inside the power supply for retrieval and analysis by users.

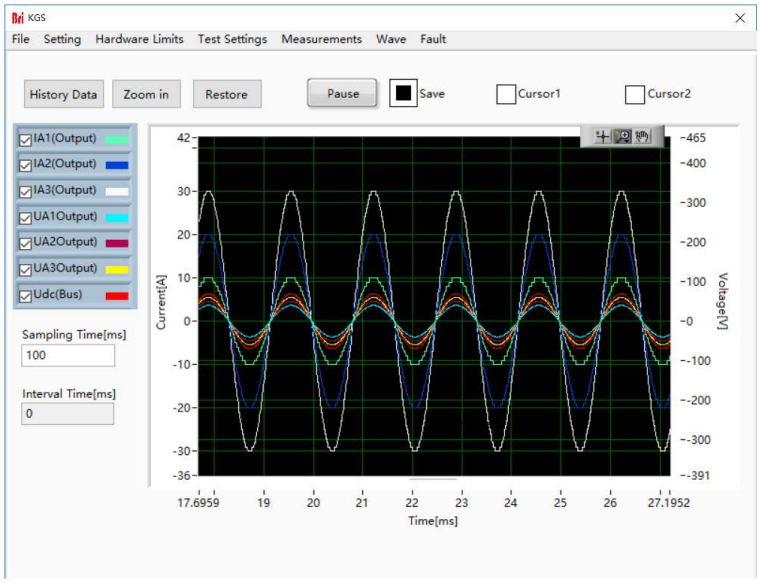

Figure 4-4 Waveform browsing panel

The KGS series can edit up to the 40th harmonic and inter-harmonic, and users can capture Waveforms through the oscilloscope.

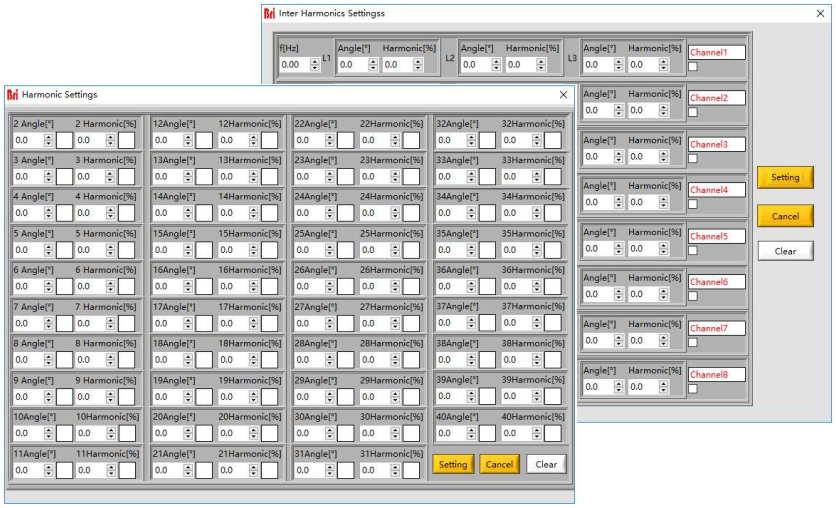

Figure 4-5 Harmonic/Inter-harmonic edit

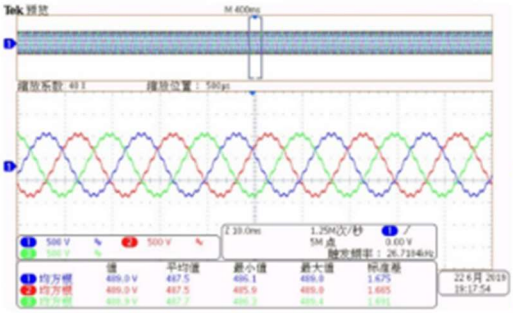

Figure 4-6 Harmonic waveform

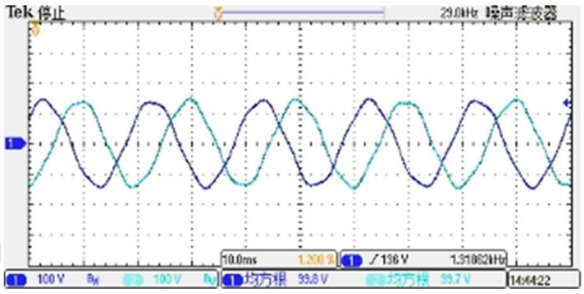

Figure 4-7 Inter-harmonic waveform

KGS series can be used for low/zero voltage ride through test. KGS series provide standard software for the low voltage ride through test of photovoltaic inverters, which can be used to simulate grid voltage/frequency changes, drops and sags to meet the low voltage ride through test requirements of photovoltaic inverters.

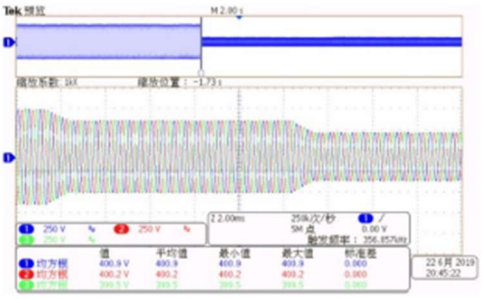

Figure 4-8 Voltage drop waveform

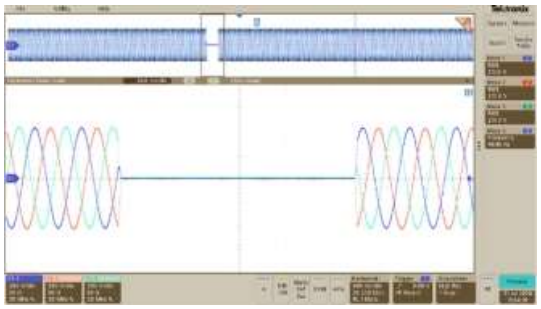

Figure 4-9 Zero voltage ride through waveform

The output terminal of KGS series can be short-circuited and supports short-circuit test. According to the technical specifications of photovoltaic power generation grid-connected inverters, the photovoltaic inverter must have a short-circuit protection function. When a short-circuit condition on the AC output side is detected, the inverter must automatically

disconnect from the grid. In the photovoltaic inverter test, the short-circuit protection function must be verified to ensure that the photovoltaic inverter can accurately and timely trip protection when a short-circuit condition occurs. KGS series can also provide software and hardware support for the short-circuit test of photovoltaic inverters. Users can set parameters on the GUI software panel according to the standard to simulate various short-circuit faults of the power grid for meeting the short-circuit test requirements of the inverter.

4.2 Constant Current Output Function

The KGS Series uses true current feedback control when working in CC mode. It is different from power supplies using voltage feedback with constant current mode, which is called voltage controlled current. The voltage controlled current power supplies maintain setting current value by adjusting output voltage and have relatively long response time to sudden impedance changes, which typically results in dynamic current overshoot or undershoot as the load impedance changes. KGS series working in CC mode does not have such problem and will always maintain the current at the setting value, regardless of transient load conditions.

The details of software settings will be introduced in chapter 5.

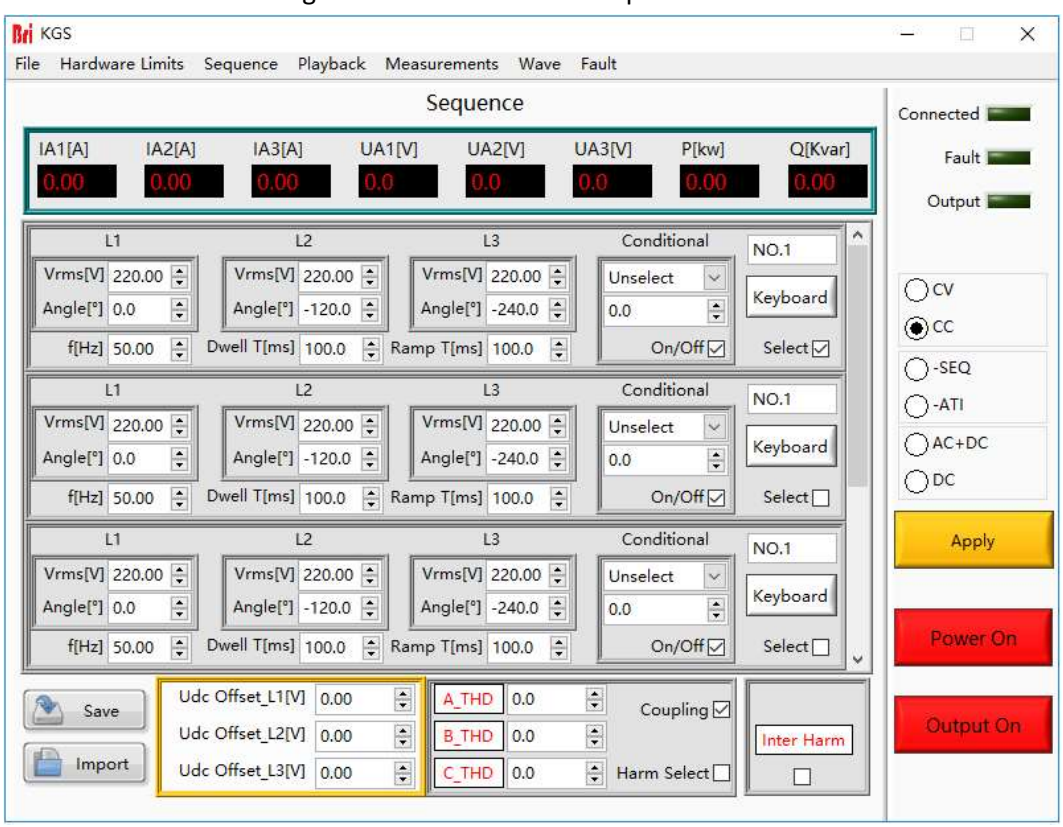

Figure 4-10 CC model panel

4.3 AC+DC/AC/DC Output

The KGS series adopts Bi-directional design and can be used as an AC/DC power supply to test DUT. Output modes include AC, DC, AC+DC.

The details software setting will be introduced in 5.7.

Chapter 5 Software Interface

5.1 GUI Software Introduction

5.1.1 Operating status

5.1.2 Sequence mode

5.1.3 Input/output controls

5.2 Communication Setting

5.3 Hardware Limits

5.4 CV/CC Mode

5.5 Sequence Mode

5.6 Analog Input

5.7 AC+DC/AC/DC

5.7.1 AC+DC

5.7.2 AC

5.7.3 DC

5.8 Harmonic and inter-harmonic simulation

5.8.1 Harmonic simulation

5.8.2 Inter-harmonic simulation

5.9 Measurements

5.10 Waveform

5.10.1 Real-time Waveform browsing

5.10.2 Historical Waveform browsing

5.11 System Status

5.12 Administrator Account

5.13 **Waveform reproduction function

5.1 GUI Software Introduction

5.1.1 Operating status

KGS series provides GUI software, which is installed on the front touch screen using the windows OS. (the software can also be installed on the control PC connected to the power supply). A few seconds after the power supply is initialized, the control unit and touch screen work, the power supply is standby. If the power supply communication is normal, the white light (Figure 3-3①) and the "connected" green light (Figure 5-1①) is always on. All functions and parameters can be accessed through the TFT-Touch panel or GUI software to set up and run.

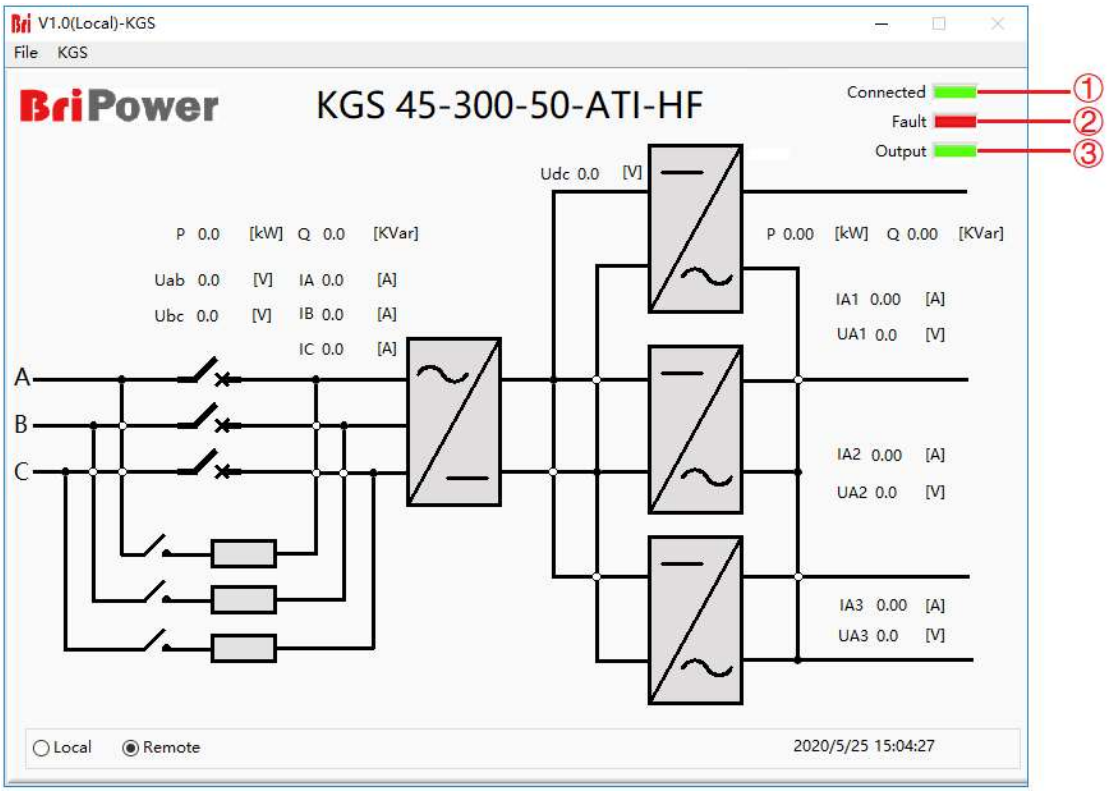

Figure 5-1 Main panel

Table 5-1

Number	Name	Note
①	**Connect**	A few seconds after the power supply is initialized, the TFT-Touch panel displayer worKGS, the green light is always on when the software and the equipment are connected normally. If the connection fails, please check whether the AC source is normally powered, the communication cable is connected normally, or the IP address of computer is 192.168.1.2.

②	**Fault**	The red light indicates the equipment automatically stops working when a fault occurs during operation. If the equipment runs in normal, the light is dark green.
③	**Output**	When equipment is operating normally and output AC/DC, the green light is always on. When the equipment has no output, the light is dark green.

5.1.2 Sequence mode

On the right side of the sequence mode Panel, the user can select the power supply operating mode, parameter input mode and output mode according to the test requirements (Figure 5-2①②③).

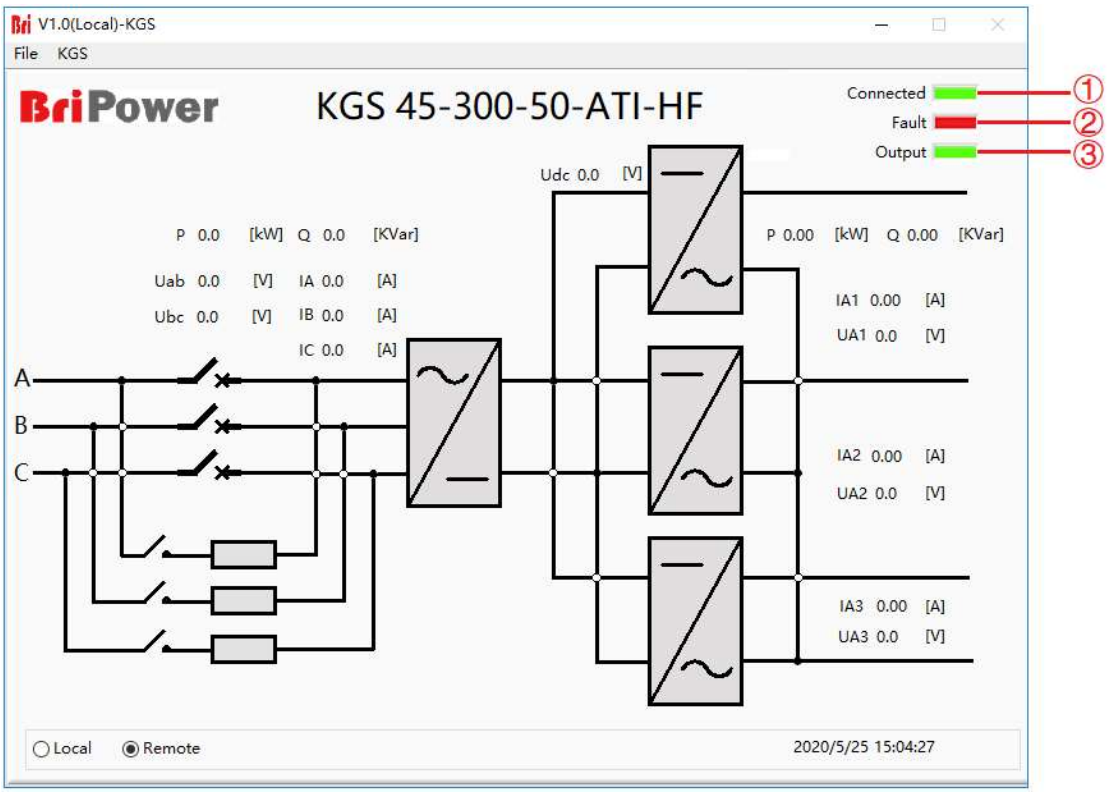

Figure 5-2 Sequence Mode and input/output control

Table 5-2

Number		Name	Note
①	**Operation Status**	**CV**	Power supply is in constant voltage mode.
		CC	Power supply is in constant current mode.
②	**Parameter**	**SEQ**	Manual setting of parameters in sequence mode.

	Input Mode	**ATI**	Analog input via ATI interface (-ATI option).
③	**Output Mode**	**AC+DC**	AC+DC output mode.
		DC	DC output mode.

5.1.3 Input/output controls

There are some important controls on the sequence panel (Figure 5-2③).Click "Apply" → "Start" → "Power On" → "Start" → "Output On", the power supply is on, click "Output On" → "Stop" → "Power On" → "Stop", the power supply is off.

Figure 5-3 Input/output controls

Table 5-3

Number	Name	Note
④	**Apply**	click "Apply" after the parameter setting is completed, the parameter will take effect.
	Power On	It is used for the network side on/ off. When the network side is on, the button is green, and when the network side is off, the button is red.
	Output On	It is used for the output side on/ off, the button is green while outputting, and the green indicator of "Output" is always on (Figure 5-1③). When there is no output, the button becomes red.

5.2 Communication Setting

Before establishing a network connection between the power supply and the remote worKGStation/PC, make sure that the remote worKGStation/PC and the power supply are on the same network segment. The default network address of the power supply is 192.168.1.2, the port is 502, and the default gateway is 255.255. 255.0. Click “File” → “Communication”, and the power IP address and port are shown in Figure 5-6.

The IP address of the remote worKGStation /PC should be the different from the IP address of the power supply. If the remote worKGStation /PC and power supply are in the LAN, ensure the IP addresses do not conflict with other equipment on the network.

In addition, the TFT-touch software and the program-controlled GUI software of the power supply have the same operation method.

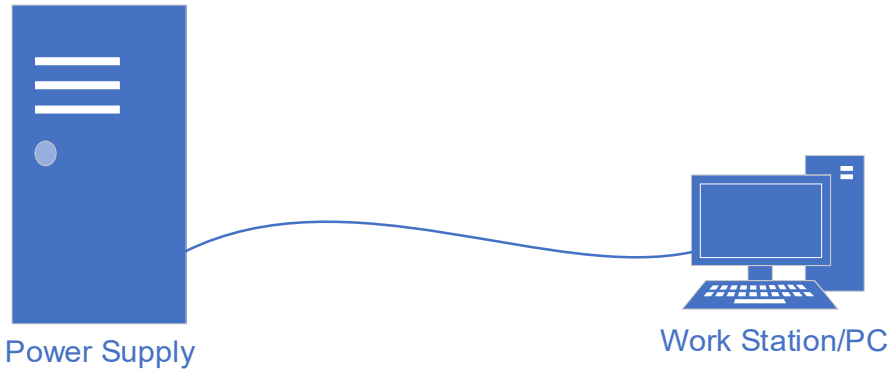

Figure 5-4 Power supply connected to worKGStation/PC

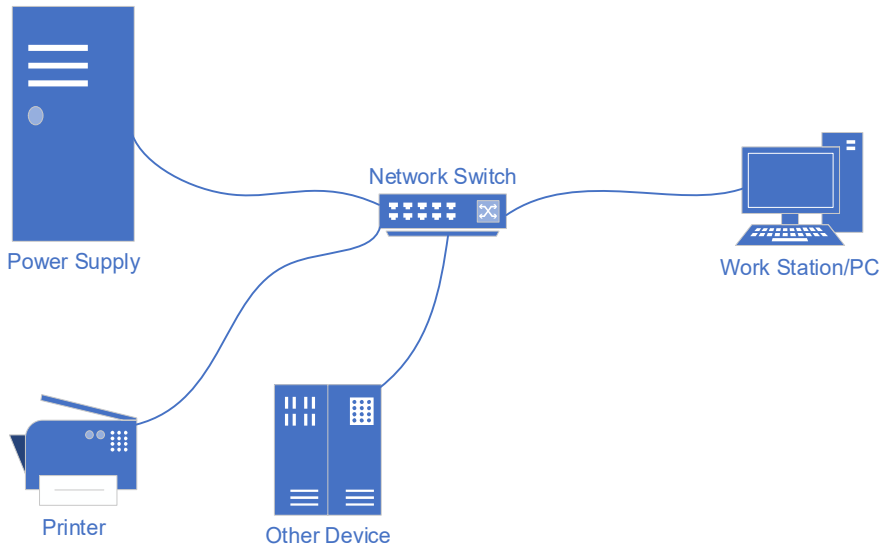

Figure 5-5 LAN connection of power supply and worKGStation/PC

In general, the hardware of worKGStation/PC connecting to the power supply must follow the requirements:

- Processor: Intel core 2 duo or above
- RAM： 2GB[1] or above
- Operating System： Windows 7 or above
- 10/100/1000 Mbps network port adaptor
- Network Switch (LAN users)
- CAT 5 network cable

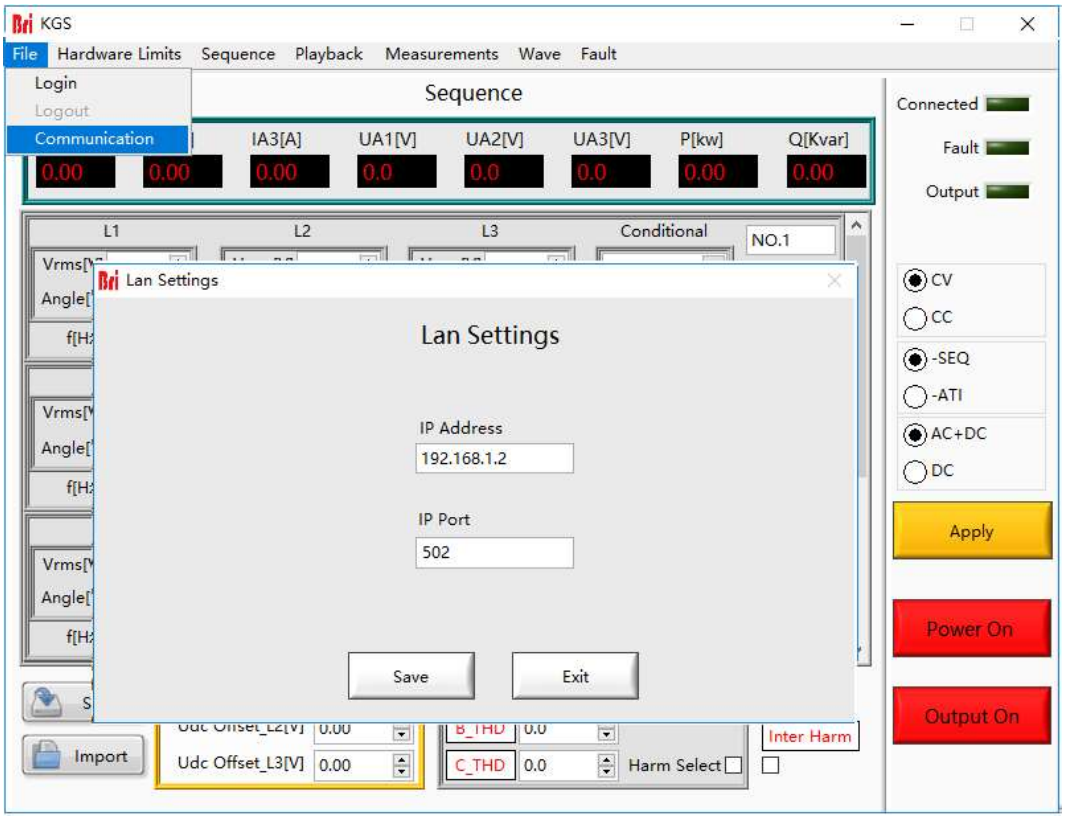

Fgure 5-6 Default network address and port of power supply

IMPORTANT INFORMATION

The network cable used for LAN connection is a straight-through cables.

[1] The actual demand for the processor and internal storage also depends on the other software actually running on the worKGStation/ PC.

5.3 Hardware Limits

To operate safety, please set the relevant protection parameters before the formal test.

Operation steps:

Click "Hardware Limits" to enter the panel (Figure 5-7). After setting the parameters, click "Apply".

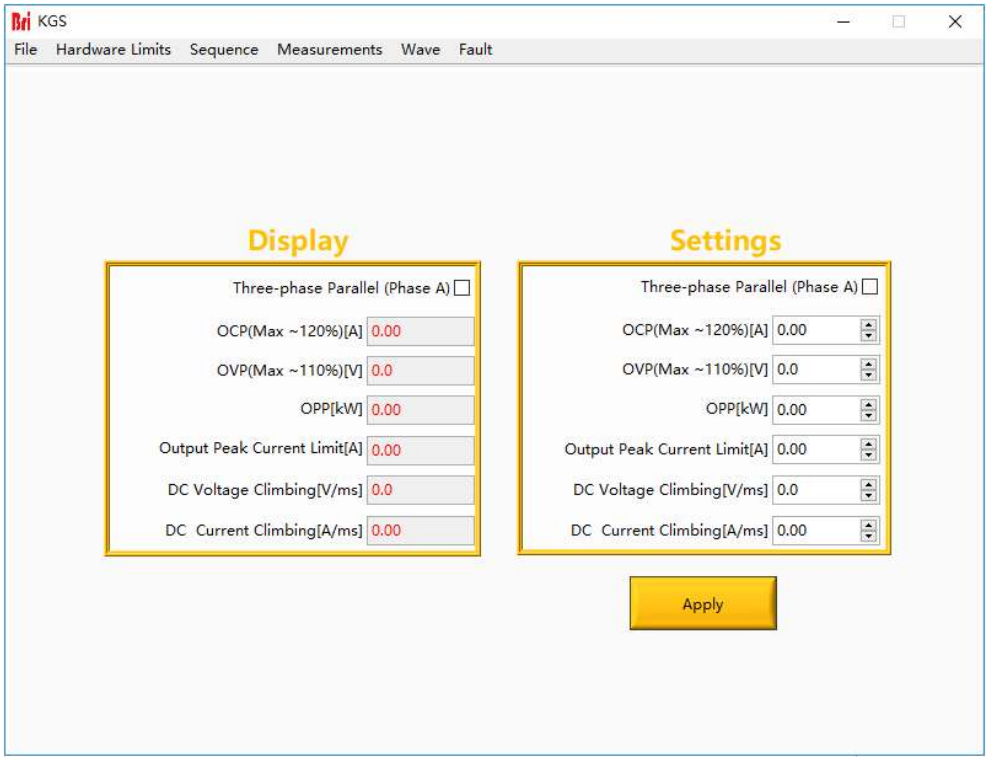

Figure 5-7 Hardware limits panel

Table 5-4

Number	Name	Note
①	**Three-phase Parallel (Phase A)**	Three-phase parallel output (-1P option), the three-phase parallel output is valid after checking
②	**OCP (Max~120%)**	Overcurrent protection value, when the output current exceeds the value, the power output will be off.
③	**OVP (Max~110%)**	Overvoltage protection value, when the output current exceeds this value, the power output will be off.
④	**OPP [kW]**	Overpower protection value, when the output power exceeds this value, the power output will be off.
⑤	**Output Peak Current Limit**	Maximum current limit value, when the output current exceeds this value, it will be limited below the current

		value.
⑥	**DC Voltage Climbing**	DC voltage climb rate.
⑦	**DC Current Climbing**	DC current climb rate.

CAUTIOUS

① Will be valid after checked, please make sure that the three-phase parallel cable connection has been completed before checking.

5.4 CV/CC Mode

KGS series provides constant voltage and constant current mode. The constant voltage mode is voltage source and the user can set the voltage value and current limit. The constant current mode is current source and the user can set the current value and voltage limit.

The KGS series provides GUI software. Users can select different operating modes on the right side of the sequence mode panel according to test requirements. In both modes, a variety of parameter settings are supported, including output phase voltage/phase current, phase angle, frequency, on/off phase angle, dwell time, and switching time.

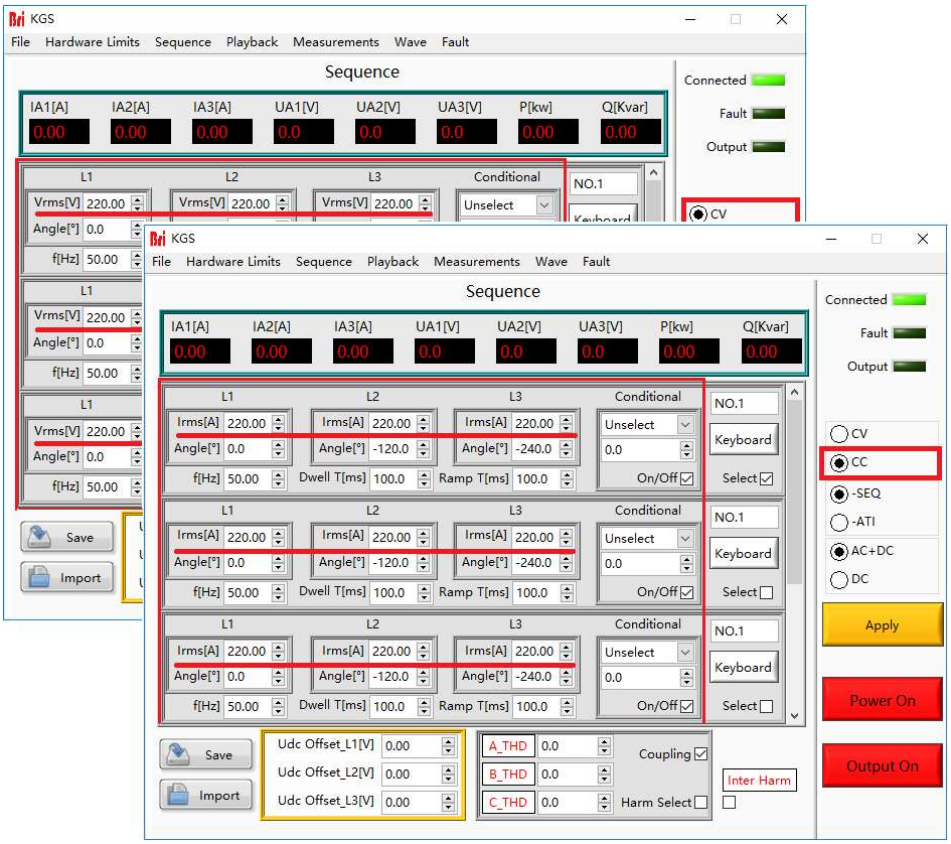

Figure 5-8 CV/CC mode

5.5 Sequence

The output parameters of the KGS series power supply can be controlled through GUI software. The sequence mode interface supports a variety of parameter settings, including output phase voltage/phase current, phase angle, frequency, on/off phase angle, dwell time, and switching time. The output parameters are displayed in real time at the top of the panel, the storage and loading of complex sequences can also be realized.

Test steps:

Click "Sequence" to enter the panel (Figure 5-9). Select the operating mode on the right side, set the parameters and select the operating sequence. the click "Apply" → "Power On" → " Output On ", the power supply start running in sequence mode.

IMPORTANT INFORMATION

When power supply is on, if the parameters needs to be modified, please directly click the Keyboard button to modify the parameters, and finally click 'Apply' (Do not turn off the power).

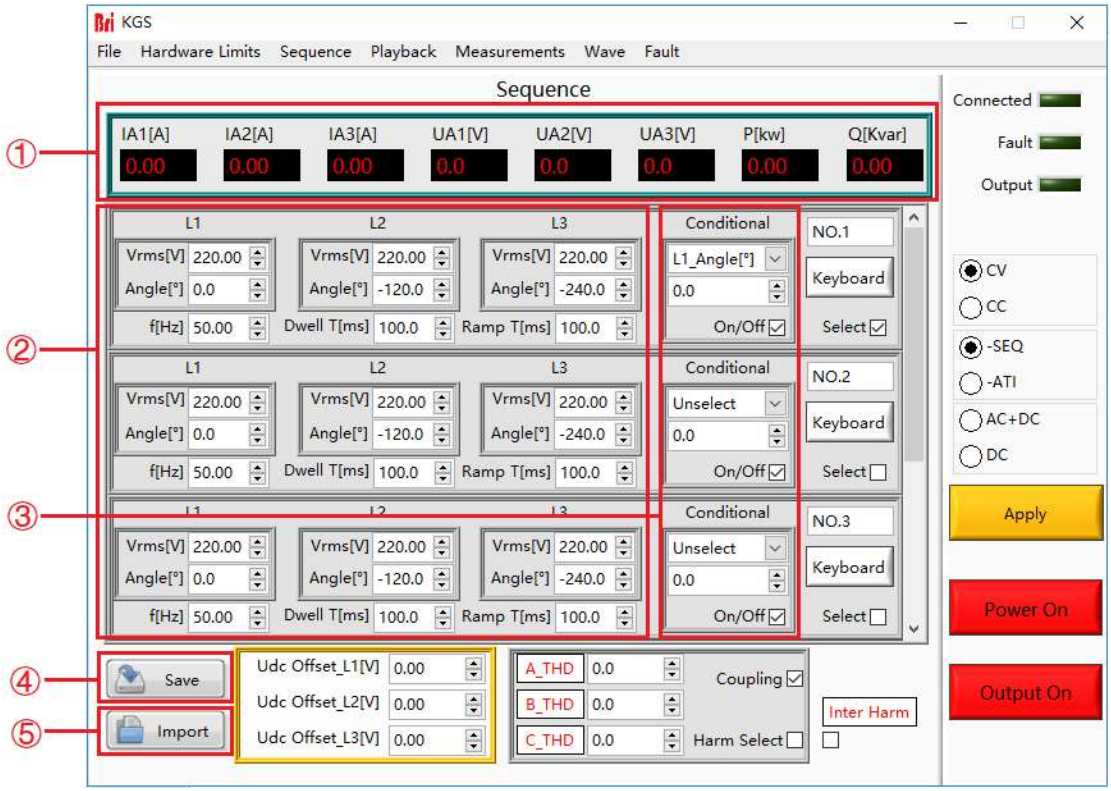

Figure 5-9 Sequence panel

Table 5-5

Number	Name	Note
①	**Real-time parameters**	The current output voltage, current and power of the power supply displays in Real time.
②	**Parameter setting 1**	The user can set the output phase voltage/phase current, phase angle, frequency, dwell time and switching time of each step. The right side of each step is the serial number and valid check box.
③	**Parameter setting 2**	The user can set the on/off phase angle of a phase of each step. The power system refers to the dwell time firstly by default, and then refers to the on/off phase angle.
④	**Sequence save button**	Click "Save", the user can save the parameters set as a .csv file during the testing. When more complicated parameters need to be set, saving the parameter data file for future use (Figure 5-10).
⑤	**Sequence Load Button**	Click "Import", the user can reload the sequence parameter file of historical test settings.

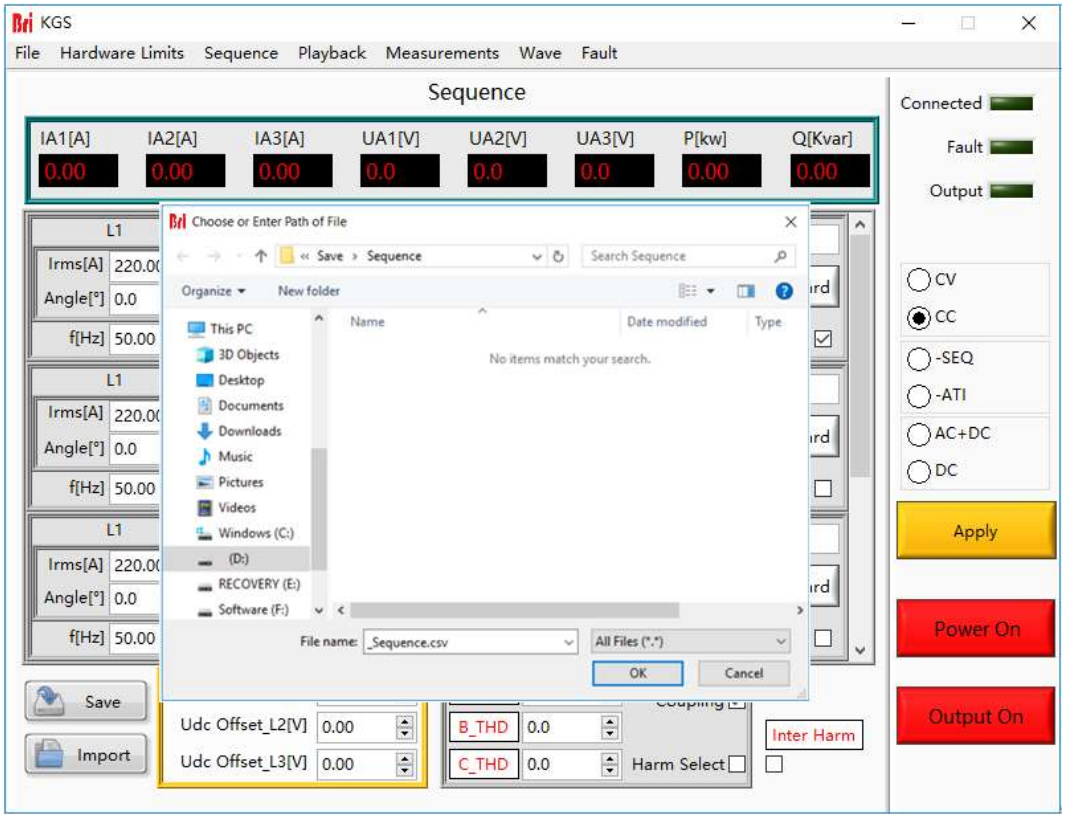

Figure 5-10 Sequence save

5.6 Analog Input

The output voltage of KGS series can be controlled by control signal and using analog input (ATI interface). The ATI interface is located on the rear panel of power supply, please refer to 1.3.5 for specific connection. The BNC connectors for analog input is used in KGS series. The set value will be adjusted according to the AC/DC voltage (0-5 V) of the analog input.

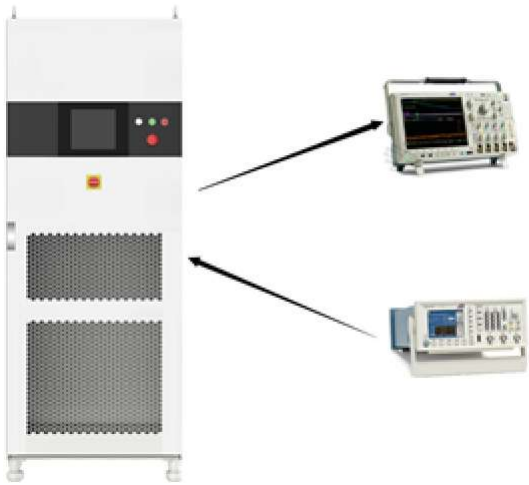

Figure 5-11 Analog input

Test steps:

Select the analog input operating mode (-ATI) on the right side of the panel (as shown in Figure 5-12), set the analog input on the signal generator, click "Power On" → "Output On" after the parameter setting is complete, the power supply is on . Users can observe and record the output voltage/current through the software Waveform panel or the oscilloscope recording panel.

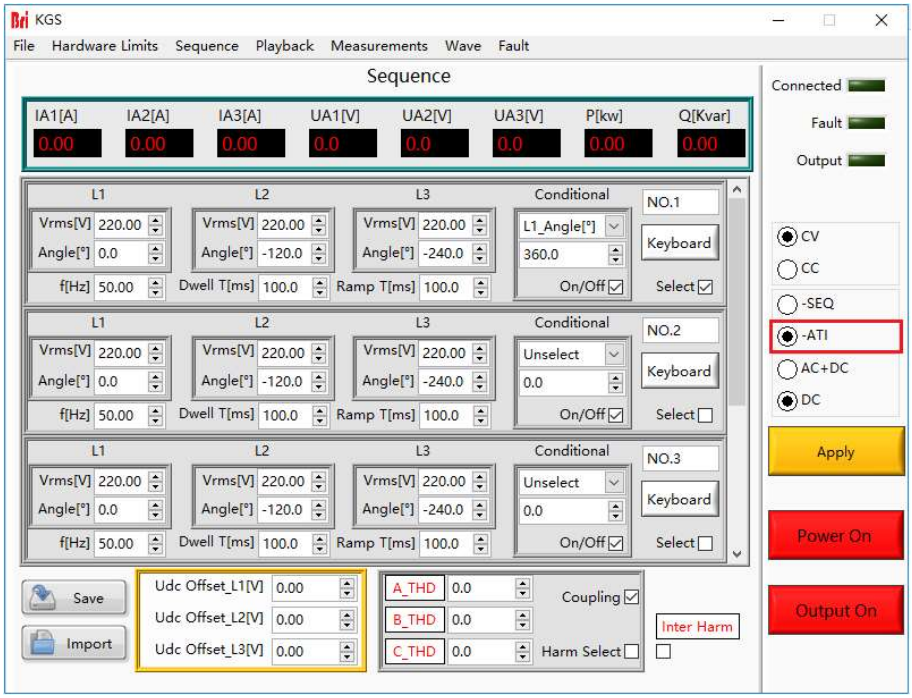

Figure 5-12 Analog input mode

5.7 AC+DC/AC/DC

5.7.1 AC+DC

The KGS series support AC+DC output mode.

Test steps:

Click "Sequence" to enter the panel, select AC+DC output mode (AC+DC) on the right side (Figure 5-13①), the user can choose different operating modes (CV/CC) according to the test requirements, and set the AC voltage/current (Figure 5-13②) and DC offset voltage/current (Figure 5-13③). After setting the parameters, click "Apply"→"Power On"→"Output On" in turn, and the power supply is on.

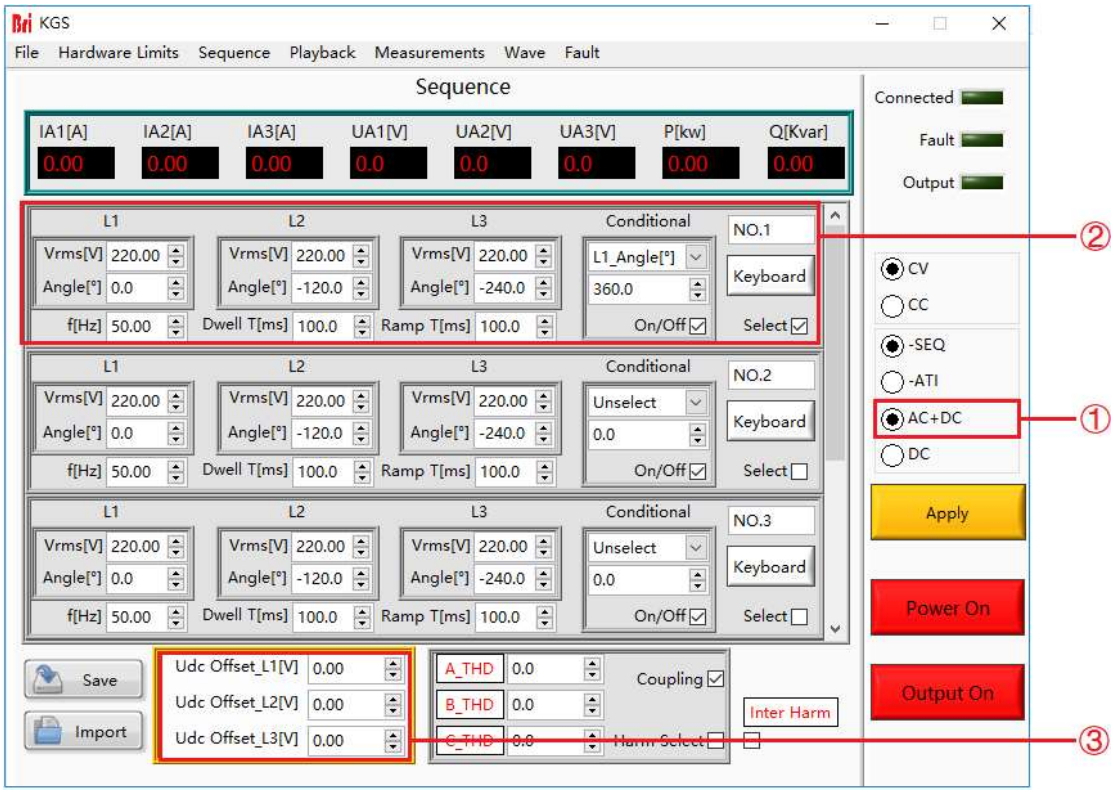

Figure 5-13 AC+DC/AC/DC mode

IMPORTANT INFORMATION

When the CV mode is selected, the parameters that can be set to AC voltage and DC offset voltage. when the CC mode is selected, the parameters can be set to AC current and DC offset current.

5.7.2 AC

The KGS series allows the generation of AC voltage, current and waveform, which can simulate the real AC circuit conditions. Three-phase independent programmable control and have high accuracy.

Test steps:

Click "Sequence Mode" to enter the sequence mode test panel, select AC+DC output mode (AC+DC) on the right side of the panel (Figure 5-13①), the user can select different operating modes (CV/CC) according to the test requirements, and set the AC voltage/current (Figure 5-13②). After setting the parameters, click "Apply"→"Power On"→"Output On" in turn, the power supply is on and outputs AC voltage/current.

IMPORTANT INFORMATION

When the DC offset is not set, the default is AC output mode.

IMPORTANT INFORMATION

In AC output mode, the three phases are independently programmable. If the -1P option is added, the output AC current range will be expanded. For example, in KGS 45-300-50, the standard output AC current is 50A/phase, if the -1P option is added (Add single phase output), after changing the corresponding wiring, the maximum single-phase AC current can be output 150A.

(when related to wiring issues, please combine 2.2.2 and 2.2.3)

5.7.3 DC

The KGS series allows the generation of DC voltage, current and waveform.

Test steps:

Click "Sequence Mode" to enter the sequence mode test panel, select the DC output mode (DC) on the right side(Figure 5-14①), the user can select different operating modes (CV/CC) according to the test requirements, and set the DC voltage/ Current (Figure 5-14②). When the parameter setting is completed, click "Apply"→"Power On"→"Output On" in turn, the power supply is on and outputs DC voltage/current.

IMPORTANT INFORMATION

In the DC output mode, only need to set the voltage/current of a certain phase, and it will be the output DC voltage/current. If the power supply adds the -1P option, the three-phase parameters (L1, L2, L3) need to be set at the same time. For example, in KGS 45-300-50, the standard output DC current is 25A/phase, if -1P option is added (Add single phase output), after changing the corresponding wiring, the maximum output DC current will be 75A.

(when related to wiring issues, please combine 2.2.2 and 2.2.3)

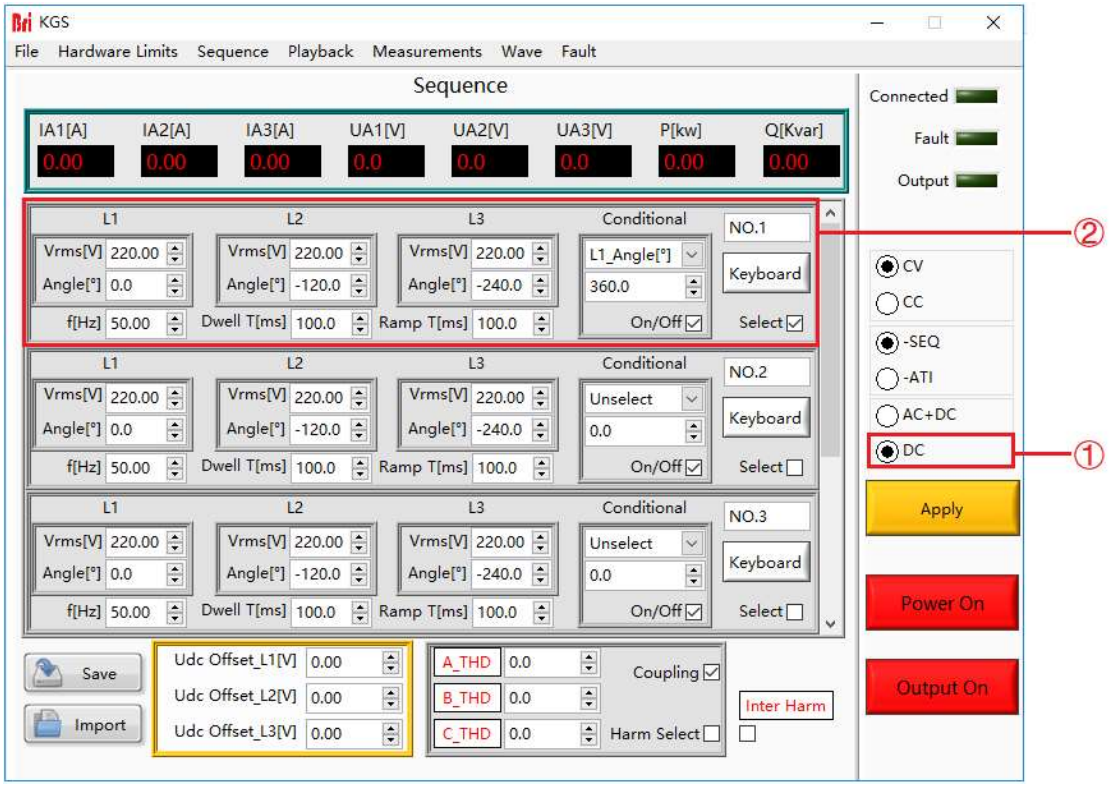

Figure 5-14 DC output mode

5.8 Harmonic and inter-harmonic simulation

5.8.1 Harmonic simulation

KGS series provide complete GUI software, which can edit up to the 40th harmonic and inter-harmonics.

Test steps:

Click "Sequence Mode" to enter the panel, firstly set the basic operating parameters (such as output voltage, frequency). Click "Apply"→"Power On"→"Output On" in turn, the power supply is on. Check the harmonic selection box (Figure 5-15①), click the A/B/C phase harmonic simulation button (Figure 5-15③), the harmonic setting panel of each order will automatically pop up, then the user can set the harmonic. After setting the parameters such as waveform angle and content, check the corresponding boxes and click "Setting" → "Apply" in turn.

To cancel the harmonic simulation, click the A/B/C phase harmonic simulation button (Figure 5-15③), click "Clear" on the pop-up panel to clear all parameters, and then click "Setting" → "Apply". Finally, uncheck the harmonic selection box.

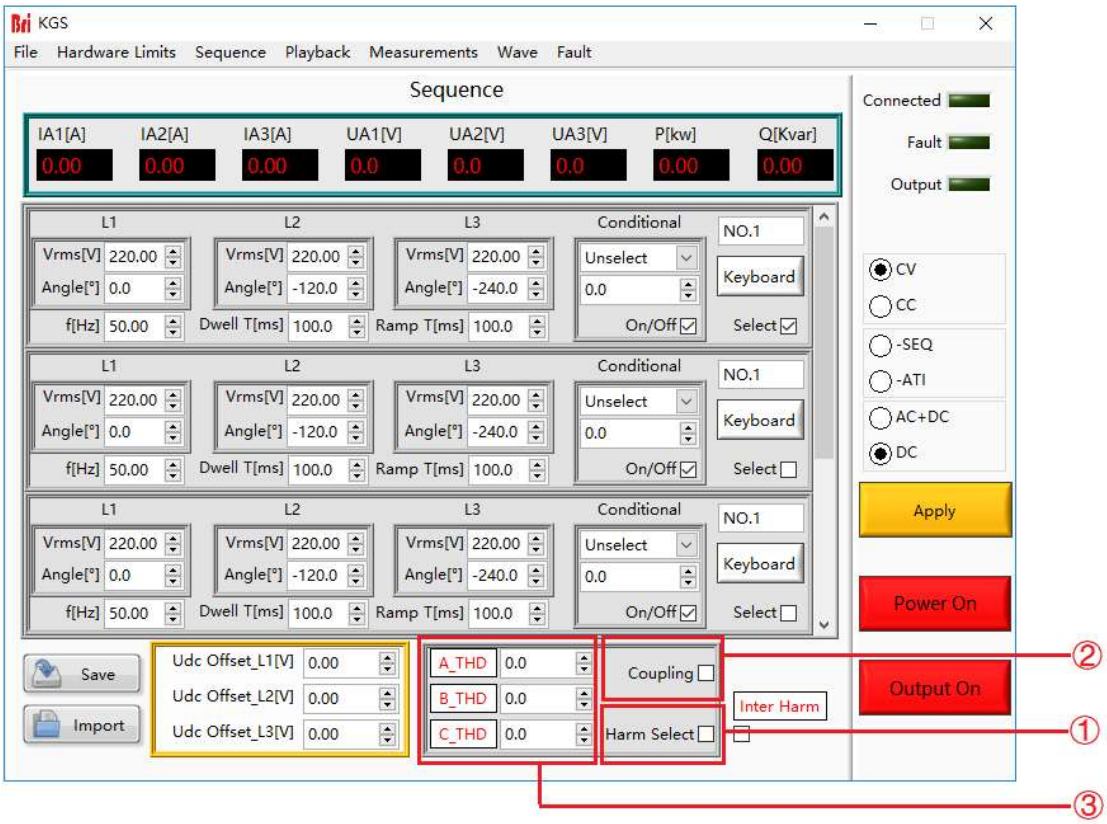

Figure 5-15 Harmonic Edit-1

Table 5-6

Number	Name	Note
①	**Harmonic selection box**	After checking, the harmonic setting is valid.
②	**Coupling box**	After checking, the three-phase harmonics can be set at the same time. If unchecked, three-phase harmonics can be set independently.
③	**A/B/C phase harmonic setting**	Three-phase harmonic setting button, the panel is shown in Figure 5-16 will automatically pop up after clicking it. The user can check and set various harmonic parameters on this panel, such as angle, content, and other parameters.

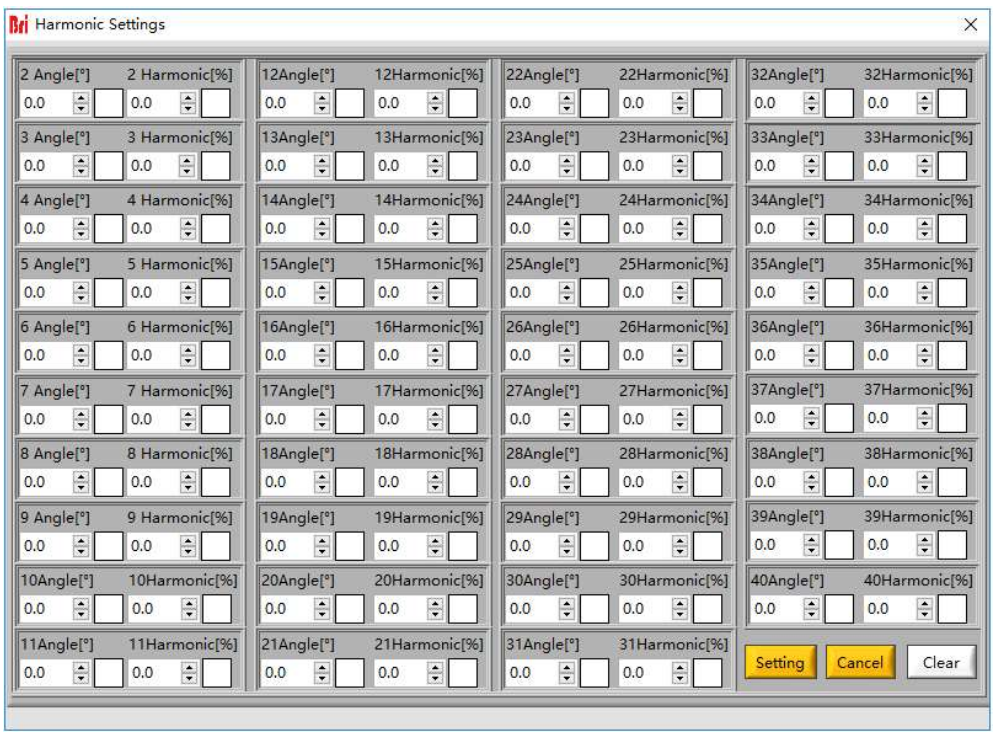

Figure 5-16 Harmonic Edit-1

5.8.2 Inter-harmonic simulation

KGS series power supplies provide complete GUI software, which can edit inter-harmonic.

Test steps:

Click "Sequence Mode" to enter the panel, firstly set the basic operating parameters (such as output voltage, frequency, etc.). Click "Apply"→"Power On"→"Output On" in turn, the power supply is on. Check and click the inter-harmonic setting button at the bottom of the page (Figure 5-17), the inter-harmonic setting panel will automatically pop up (Figure 5-18). The user can set

the inter-harmonic frequency, angle, content, and other parameters on this panel. After the parameter setting is completed, check the corresponding box, and click "Setting" → "Apply" in turn.

To cancel the inter-harmonic simulation, click the inter-harmonic setting button at the bottom of the page (Figure 5-17), click "Clear" in the pop-up panel to clear all parameters, click "Setting" → "Apply" in turn, and finally cancel the harmonics by checking the box.

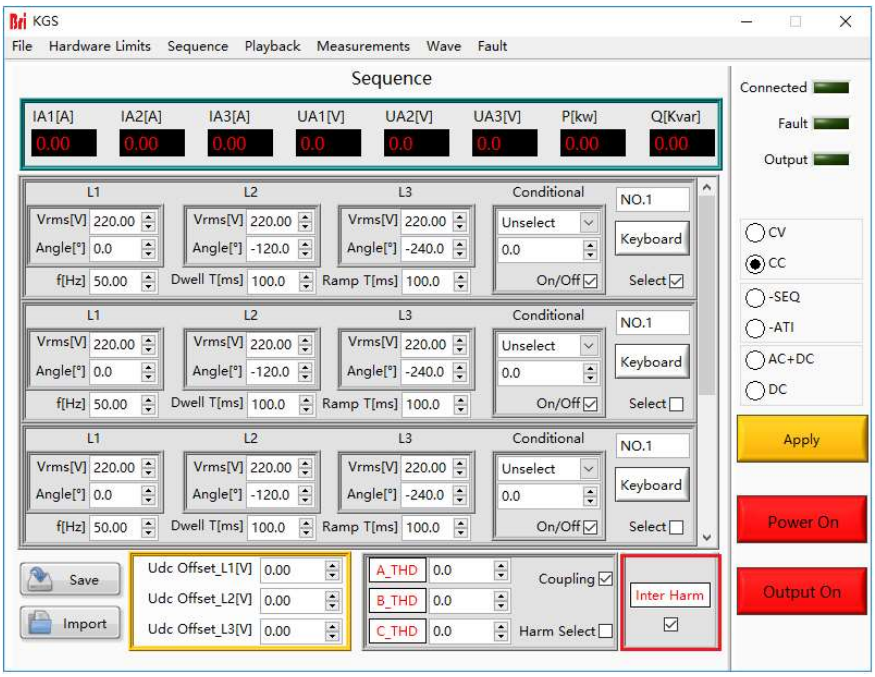

Figure 5-17 Inter-harmonic edit -1

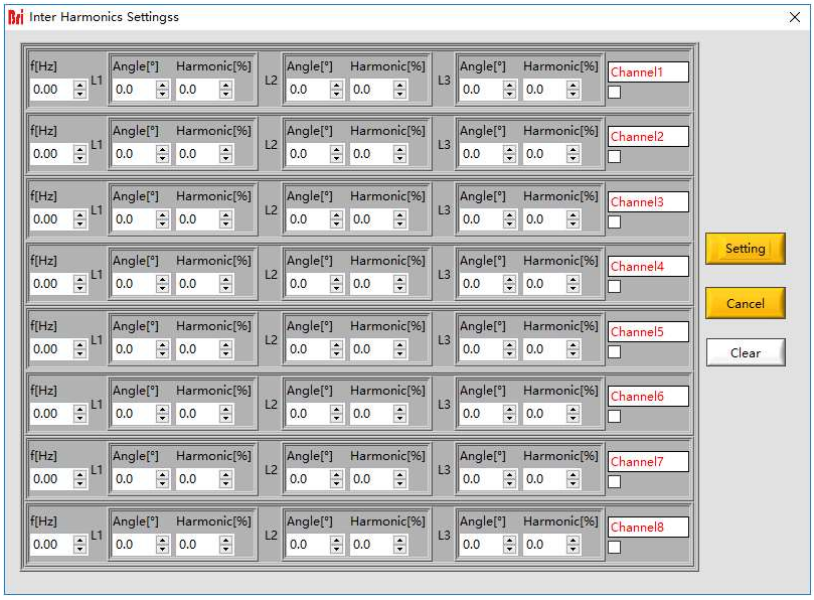

Figure 5-18 Inter-harmonic edit -2

5.9 Measurements

The GUI software of KGS series can monitor the input/output status of the equipment in real time. Click "Measurement" to enter the panel (Figure 5-17). The user can monitor real-time Input current/voltage/power, output current/voltage/power, output frequency and other parameters on this panel.

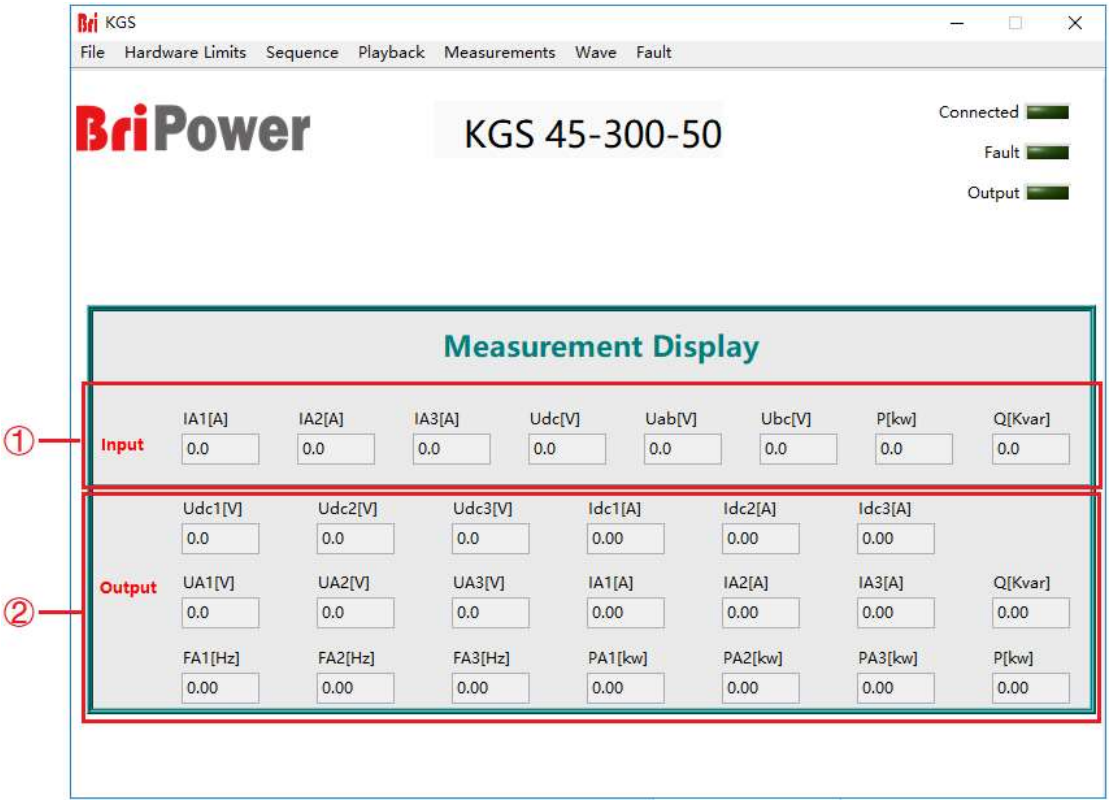

Figure 5-19 Measurements panel

Table 5-7

Number	Name	Note
①	**Input Parameters**	Real-time display of the input phase current, input voltage, input active / reactive power and other parameters.
②	**Output Parameters**	Real-time display of output current, output voltage, output power and output frequency and other parameters.

5.10 Waveform

5.10.1 Real-time waveform browsing

The GUI software of KGS can record the waveform of output voltage and current, and store in the TFT touch panel/worKGStation, for the user to retrieve browsing and analysis in future

Steps:

Click "waveform" to enter the panel (Figure 5-20). In the window of waveform browsing, the user can individually or simultaneously select the data of output voltage or output current (Figure 5-20⑦) and browse the waveform. In addition, the user can also set the window display time of the waveform data points, and observe the sampling time interval, start time, saved time and other parameters (Figure 5-20⑧).

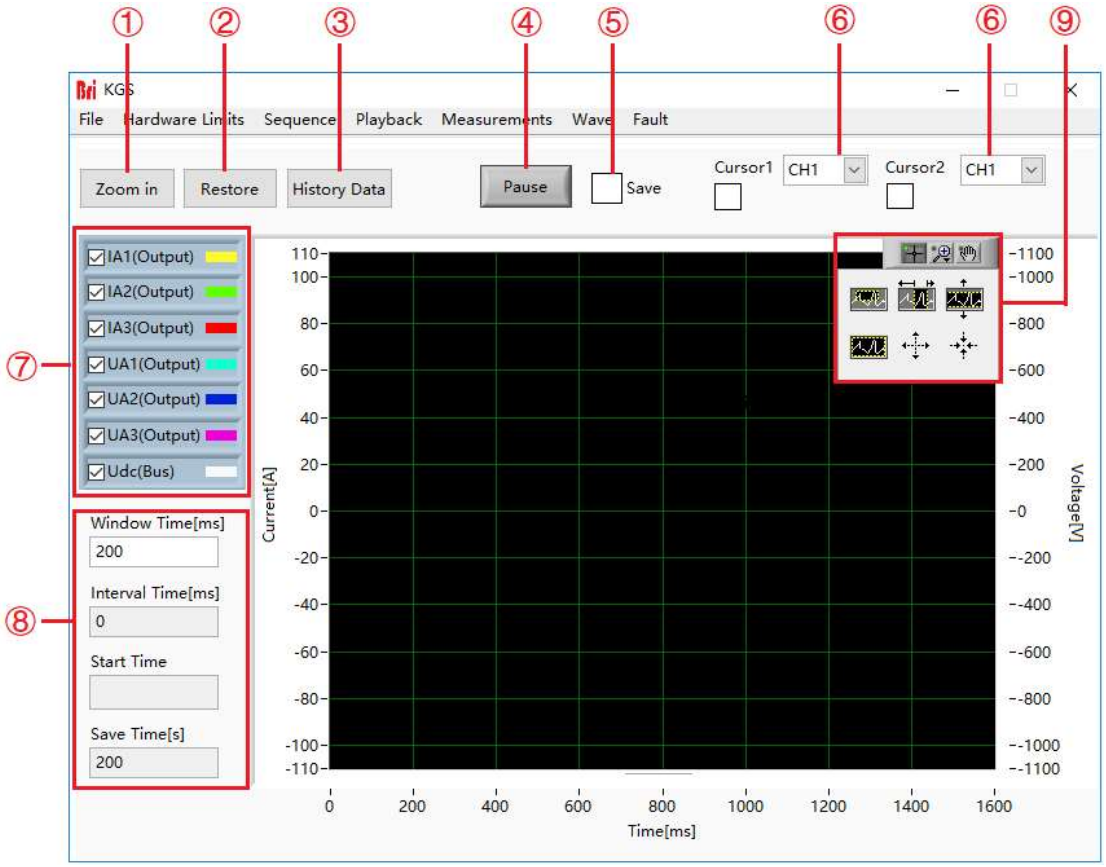

Figure 5-20 Waveform Panel

Table 5-8

Number	Name	Note
①	**Zoom In**	Click “Zoom in” control to zoom in waveform.
②	**Restore**	Click “Restore” control to restore the enlarged waveform to the default scale for browsing.

③	**Historical Data**	Retrieve the historical Waveform data, click it to pop up the historical waveform browsing window as shown in Figure 5-19.
④	**Pause**	Click pause control, the waveform will stop updating and stay on the captured.
⑤	**Save**	Check “Save”, the data in the waveform browsing window will be saved.
⑥	**Cursor1**	Cursor 1, the amplitude and time of a point on the waveform, often cooperate with cursor 2 to measure the time interval.
	Cursor2	Cursor 2, the amplitude and time of a point on the waveform, often cooperate with Cursor 1 to measure the time interval.
⑦	**Waveform Selection**	The output voltage or output current data can be set individually or at the same time and browse its waveform.
⑧	**Parameter Setting**	The window display time, sampling time interval and other parameters of the waveform data points can be set.
⑨	**Control button**	The user can zoom in horizontally/vertically, zoom in/out as a whole, zoom in partly, restore the original state, and drag the waveform though clicking different buttons.

5.10.2 Historical waveform browsing

The GUI software of KGS can record the waveform of output voltage and current, and store it in the TFT touch panel/worKGStation, for users to retrieve browsing and analysis in future

Operation Steps:

Click "Historical Data" to enter the panel (Figure 5-21). The historical waveforms are arranged in the window on the left in order of recording time. After selecting a waveform, click "Read waveform " to browse the historical Waveforms (the operation steps are similar to 5.10.1).

By checking different boxes on the left side of the panel, the corresponding output voltage/current and DC bus voltage waveform s can be observed. Click the partial zoom button and drag the mouse, the Waveform area in the box will be partially enlarged (Figure 5-22-1); click the horizontal/vertical zoom button and drag the mouse, the waveform between the cursors can be zoomed horizontally/vertically (Figure 5-22-2 and Figure 5-22-3); click the Waveform restore button, the waveform in the Waveform display area will be restored (Figure 5-22-4); click the overall zoom in/out button and click the mouse, the waveform will be overall zoomed in/out (Figure 5-22-4, 5-22-5 and Figure 5-22-6); click the drag button to move the waveform freely (Figure 5-22-7); click the cross button can reset all functions (Figure 5-22-8).

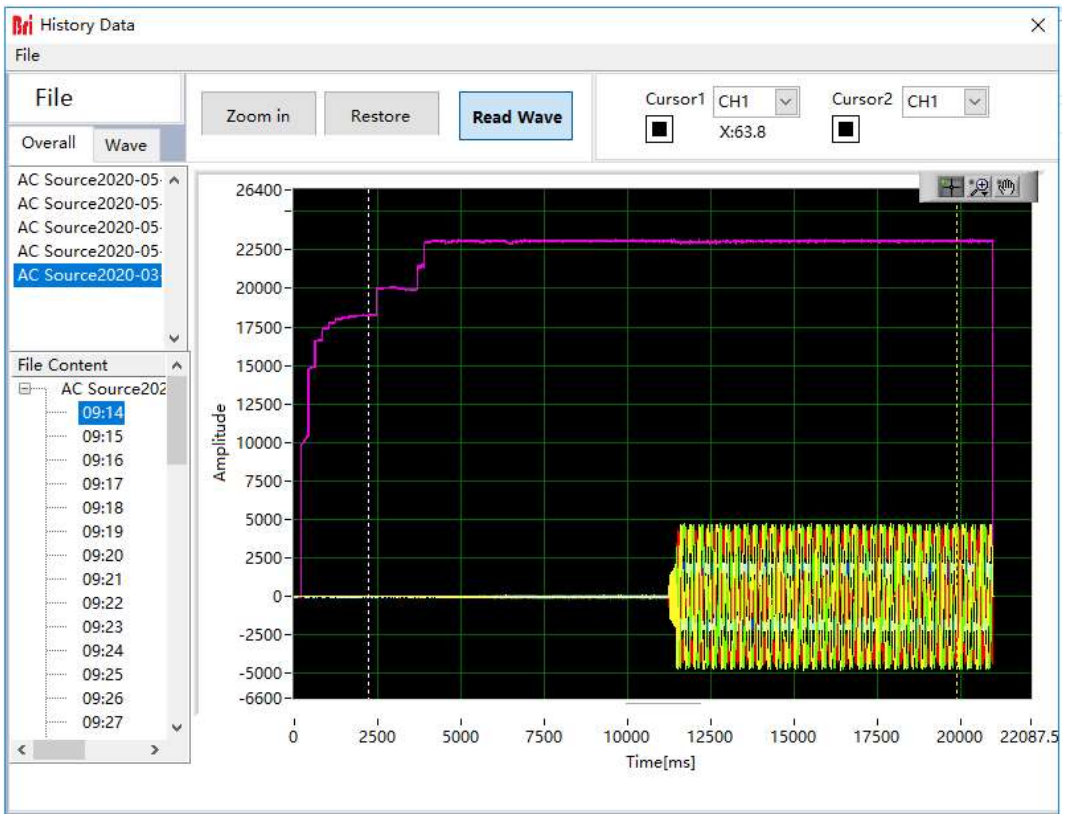

Figure 5-21 Historical waveform panel

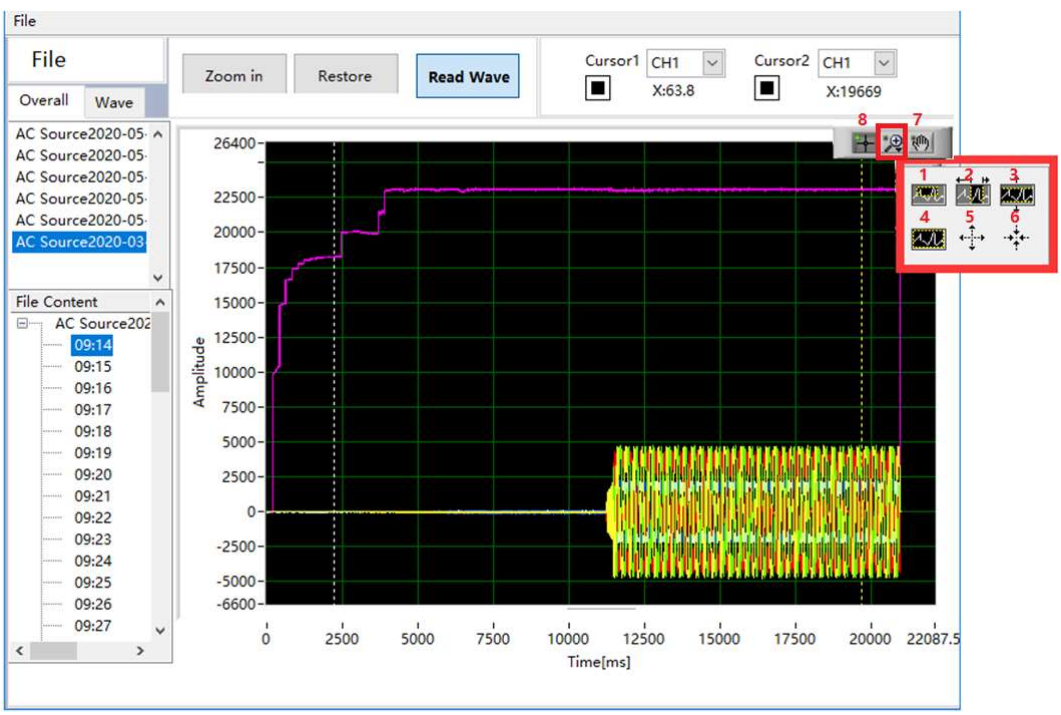

Figure 5-22 Buttons

5.11 System Status

The user can browse the status of each part of the system during the testing through the GUI software panel.

Operation steps:

Click "System Status" to enter the panel, the user can browse the main system fault (Figure 5-23), software fault (Figure 5-24) and module fault (Figure 5-25). Dark green light means no faul, and red light means fault occurs. After troubleshooting, the user can click "Reset" to reset the power supply.

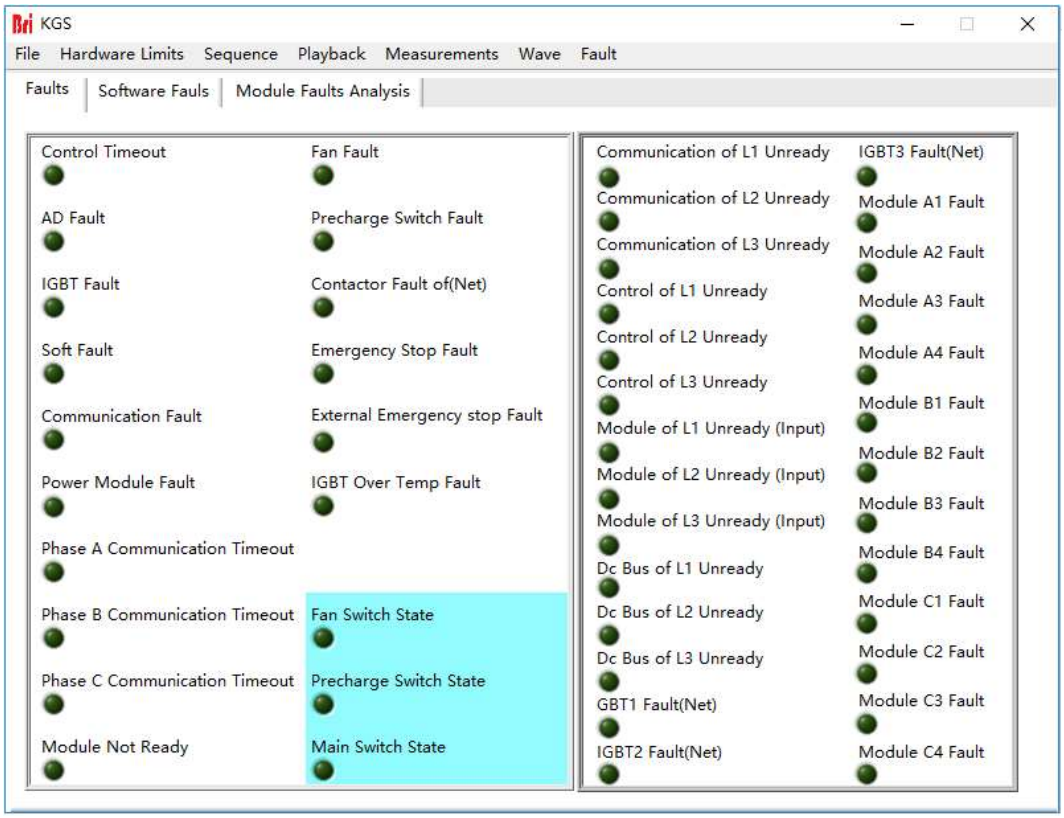

Figure 5-23 System status panel-main system status

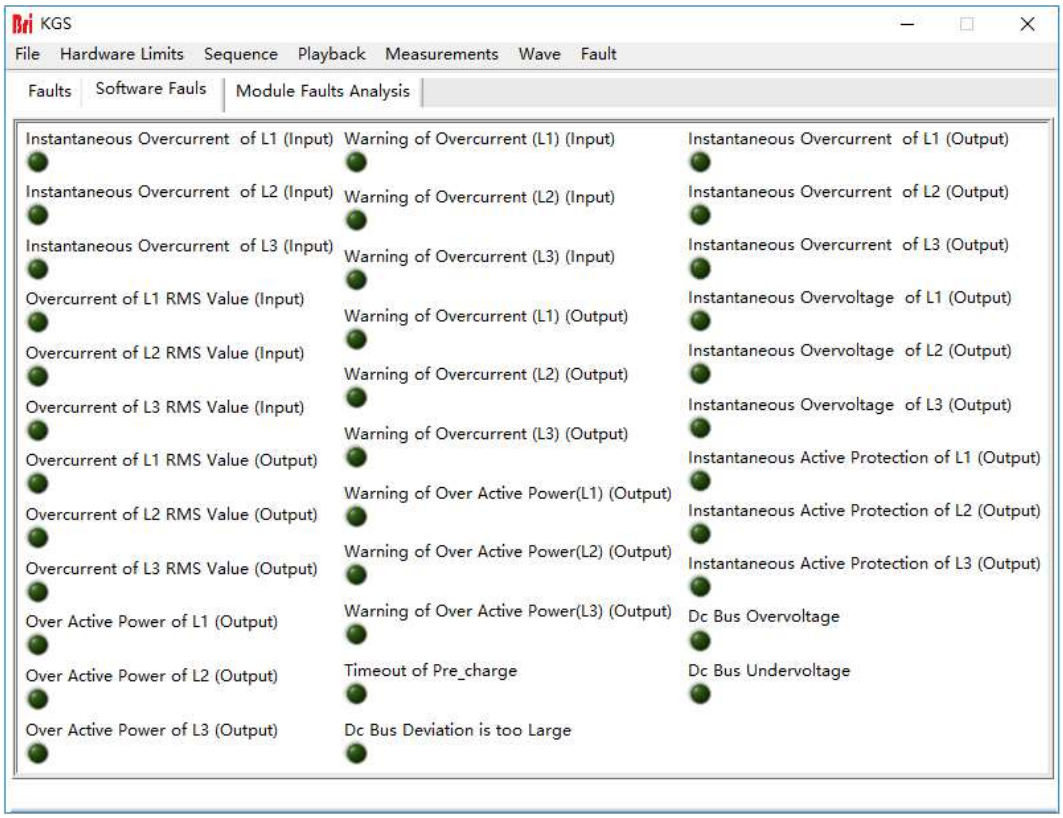

Figure 5-24 System status panel- software fault

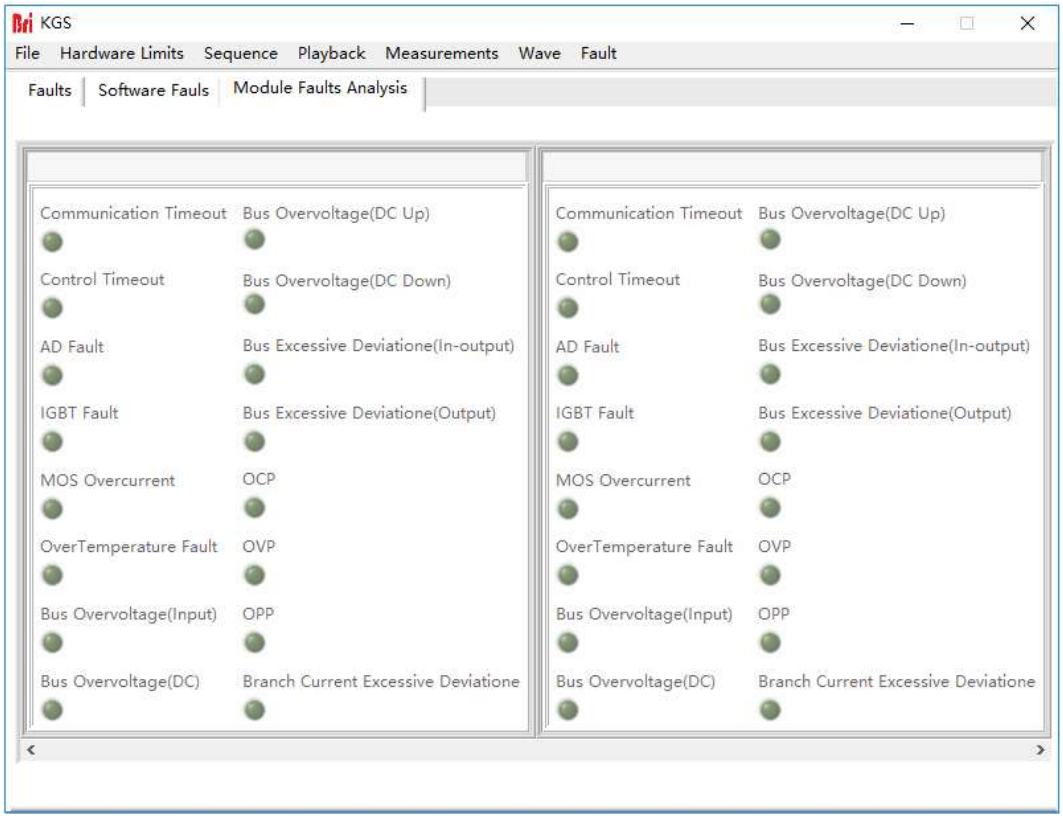

Figure 5-25 System status panel- module fault

5.12 Administrator Account

Enter the administrator account, the user can set the internal parameters. For avoiding accidental settings leading to equipment failure or loss of accuracy, it is not recommended that the user perform this operation. The default login account is a guest account, and all functions of the equipment are open and can be used normally.

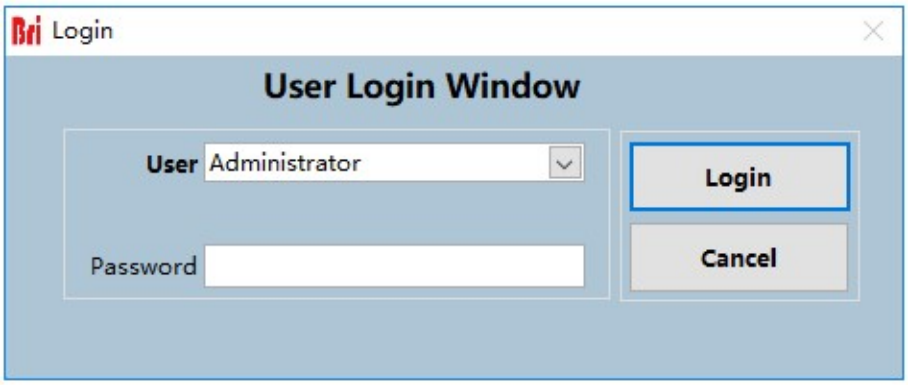

Figure 5-26 System status panel

5.13 ** Waveform Reproduction Function

The KGS series can realize the waveform reproduction function by importing the waveform data file (.csv) agreed with the user.

Operation Steps:

(1) Click "Playback" to enter the waveform reproduction panel, click "Power On" (Figure 5-27④) to start the network side.

(2) Click "Import" to import the default waveform curve (Figure 5-27①) (If the customize curve file need to import by users, check the “Enable” box, and then click “Import”).

(3) Set parameters, such as waveform scale, waveform sampling time, waveform start/end time, etc. (Figure 5-27②).

(4) Click "Apply" → "Replay" (Figure 5-27 ⑤) to import waveform data.

(5) Click "Output On" (Figure 5-27 ⑥), the power supply worKGS and start to output.

Table 5-9

Number	Name	Note
①	**Import**	Waveform import control click this control to import the default waveform file. When users need to reproduce other waveforms, select "Enable" and then click "Import" to import the curve (.csv file) (Figure 5-28).
②	**Ratio**	Enlargement or reduction ratio of waveform data..

	Sampling [ms]	Sampling time of waveform data.
	Start Time [ms]	Start time of waveform data.
	End Time [ms]	End time of waveform data.
③	**Data display area**	Real-time display of output voltage and current value.
④	**Power On**	Network side power on button.
⑤	**Apply**	Click"Replay", then the parameter setting will be valid, and the wavaform import will be valid.
⑥	**Output On**	Output side on button.

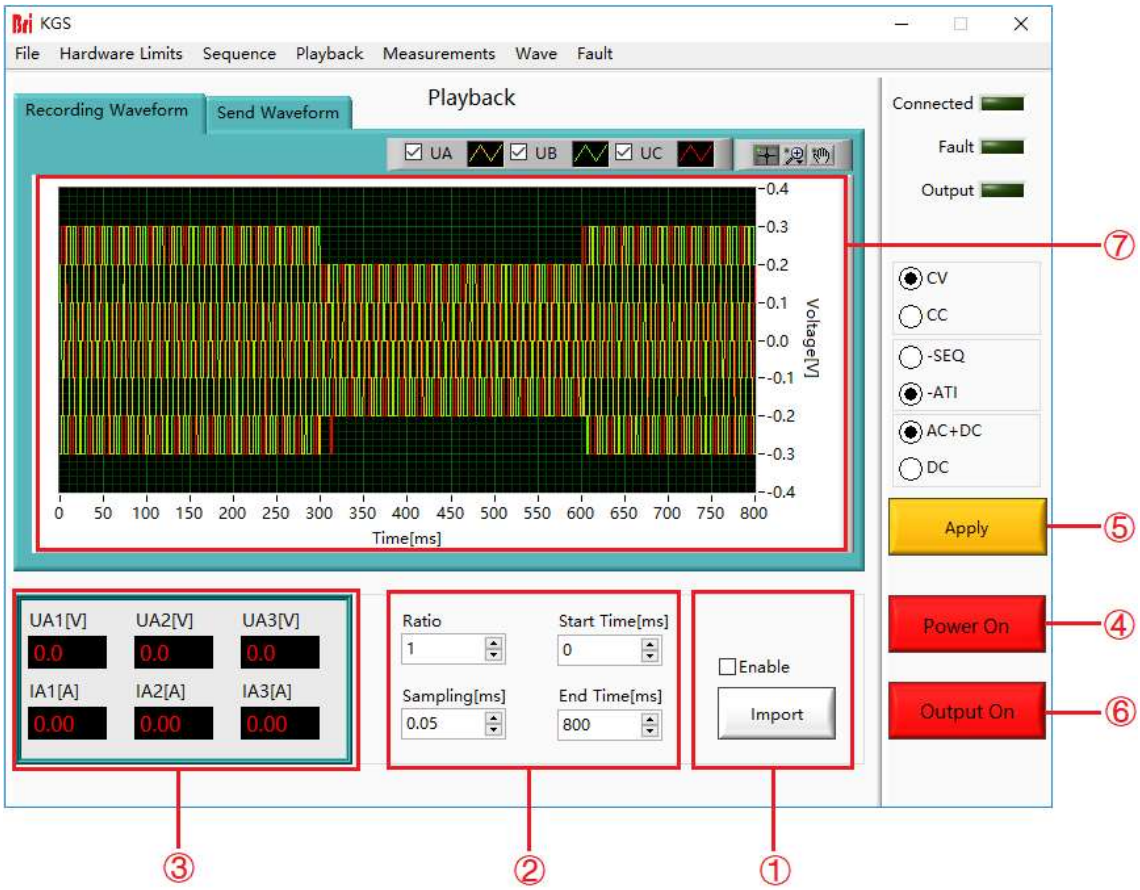

Figure 5-27 Waveform reproduction interface

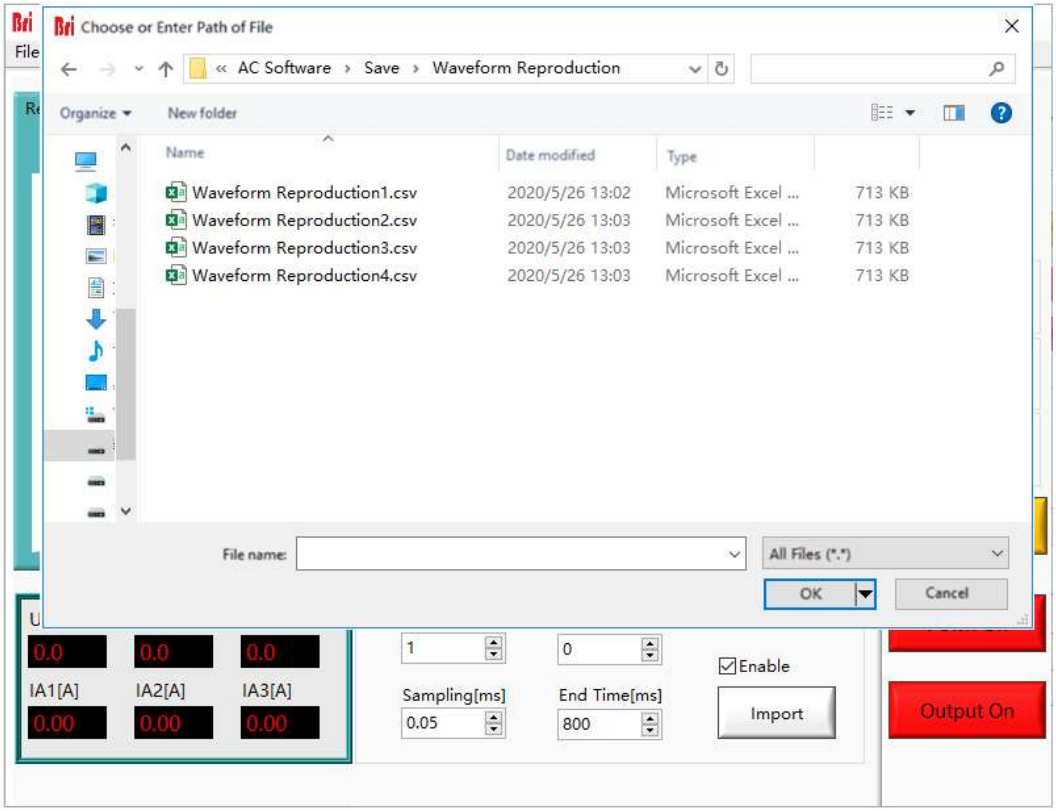

Figure 5-28 Reproduced waveform import panel

IMPORTANT INFORMATION

This function is customized, and the waveform can be reproduced by importing the Waveform data file (.csv) agreed with the user.

The custom file here is a commonly agreed fixed format, which is for reference only.

Chapter 6 Equipment verification and calibration

6.1 Performance Verification

6.1.1 Verify equipment and settings

6.1.2 Verify content

Voltage Range

Current Range

Frequency Range

Voltage Accuracy

Current Accuracy

Power Accuracy

Frequency Accuracy

Output Characteristics

Load Regulation

Voltage THD

Ripple Test

Harmonic Test

Inter-harmonic Test

Voltage drop Change

Three phase Unbalanced Output

Step Load Variation

Voltage Offset Test

TTL Signal Trigger

Waveform Injection

Protection Function

Log Function

Clock Function

LCD Display Test

6.2 Test Record Form

6.1 Performance Verification

6.1 1 Verity equipment and settings

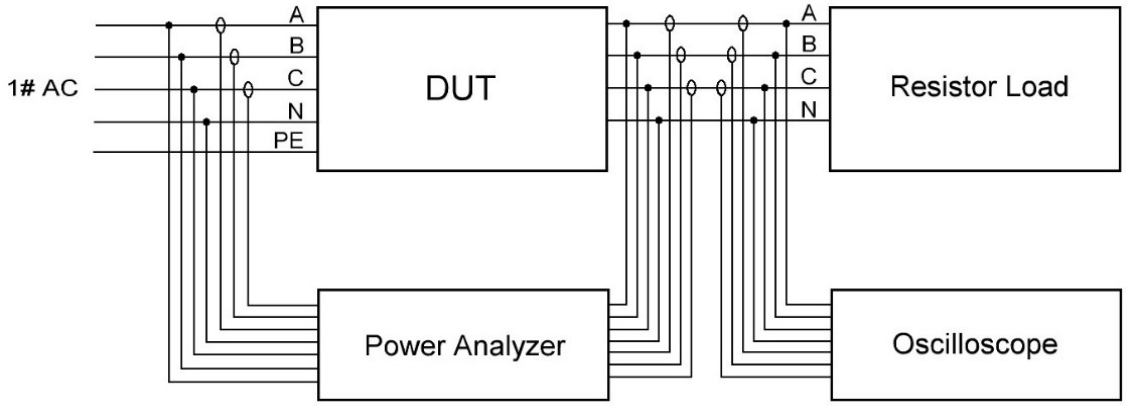

Figure 6-1 Three-phase output test with resistive load

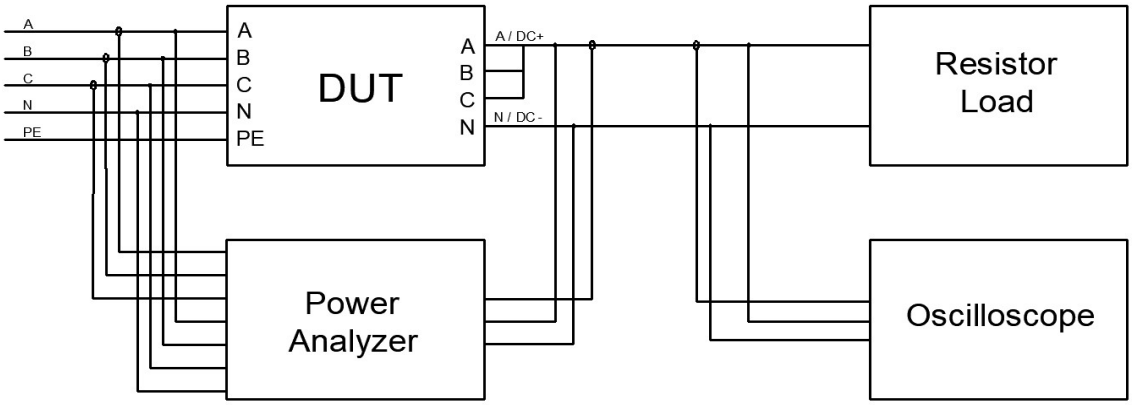

Figure 6-2 Single-phase output test with resistive load

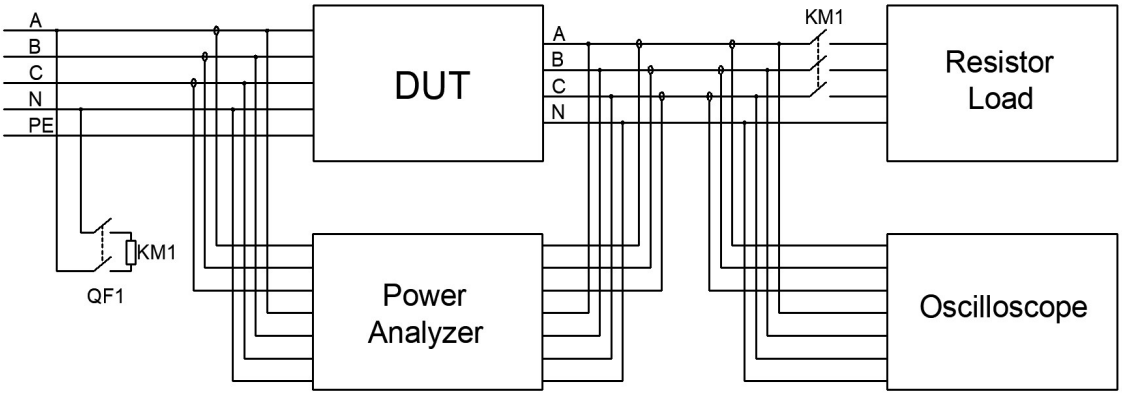

Figure 6-3 Load step change test

Table 6-1

No.	Instruments	Model
1	Power analyzer	ZIMMER LMG670
2	Oscilloscope	Tektronix DPO2002B/ DS4000E
3	Voltage Probe	RIGOL RP1050D
4	Current Probe	CAT Ⅲ 600V/1000A
5	Noise Detector	SOUND LEVEL METER
6	Temperature Scanner	FLUKE MT4 MAX
7	breaker	Schneider C4A
8	AC contactor	CHNT NC2-150

CAUTIOUS

To achieve the best performance, all verification and calibration procedures should follow the recommendations:

The ambient temperature remains constant and is between 25±5℃.

The relative humidity of the environment is below 90%.

Keep the cable length as short as possible, and use twisted or shielded cables to reduce noise.

SHOCK HAZARD

Danger of electrical hazards, lethal voltage, the maximum voltage generated by KGS series can reach 750VDC and above!

Make sure that all equipment and load wiring are connected reliably.

When connecting / disconnecting any equipment which connected to the power supply or changing the wiring, turn off the power supply, and do not live working.

6.1.2 Verity content

- **Voltage Range**

  Connect the input side of the AC/DC source to the power grid, so that the input voltage is within the operating voltage range of the power supply, and the output side is connected to a pure resistive load. Adjust the output voltage value within the rated voltage range, read and record the measured value on the power analyzer. (Including DC voltage and AC voltage)

- **Current Range**

  Connect the input side of the AC/DC source to the power grid, so that the input voltage is within the operating voltage range of the power supply, and the output side is connected to a pure resistive load. Adjust the output voltage value within the rated voltage range to make the output current reach the rated current value of the power supply, read and record the measured value on the power analyzer (including DC current and AC current).

- **Frequency Range**

  Connect the input side of the AC/DC source to the power grid, so that the input voltage is within the operating voltage range of the power supply. After setting the voltage value, change the frequency setting of the power supply.

- **Voltage Accuracy**

  Connect the input side of the AC/DC source to the power grid, so that the input voltage is within the operating voltage range of the power supply, and the output side is connected to a pure resistive load. Set the output voltage value to make the power supply work within the rated output voltage range, read and record the output voltage measurement value on the power analyzer and the power supply, and take the largest error for calculation.

  The voltage accuracy is obtained by the following formula:

$$\delta_U = \frac{|U_0 - U_1|}{U_N} \times 100\%$$

And:

δ_U——VoltageAccuracy;

U_1——Voltage value measured via power analyzer, V;

U_0——Voltage value displayed on power supply, V;

U_N——Rated Voltage, V;

- **Current Accuracy**

  Connect the input side of the AC/DC source to the power grid, so that the input voltage is within the operating voltage range of the power supply, and the output side is connected to a

pure resistive load. Set the output voltage value to make the power supply work within the rated output current range, read and record the output current measurement value on the power analyzer and the power supply, and take the largest error for calculation.

The current accuracy is obtained by the following formula:

$$\delta_I = \frac{|I_0 - I_1|}{I_N} \times 100\%$$

And:

δ_I——Current Accuracy;

I_1——Current value measured via power analyzer, A;

I_0——Current value displayed on power supply, A;

I_N——Rated Current, A;

- **Frequency Accuracy**

Connect the input side of the AC/DC source to the power grid, so that the input voltage is within the operating voltage range of the power supply. After setting the voltage value, change the frequency setting value of the power supply, read and record the output frequency measurement value of the power analyzer and the power supply, and take the one with the largest error for calculation. The frequency accuracy is obtained by the following formula:

$$\delta_f = \frac{|f_0 - f_1|}{f_N} \times 100\%$$

And：

δ_f——Power accuracy;

f_1——Frequency value measured via power analyzer, Hz；

f_0——Frequency value displayed on power supply, Hz；

f_N——Rated Frequency， Hz；

- **Power Accuracy**

Connect the input side of the AC/DC source to the power grid, so that the input voltage is within the operating voltage range of the power supply, and the output side is connected to a pure resistive load. Set the output voltage value to make the power supply work within the rated output power range, read and record the output power measurement value on the power analyzer and the power supply, and take the largest error for calculation. The power accuracy is obtained by the following formula:

$$\delta_P = \frac{|P_0 - P_1|}{P_N} \times 100\%$$

And:

δ_P——Power Accuracy;

P_1——Power value measured via power analyzer, kW;

P_0——Power value displayed on power supply, kW;

P_N——Rated Power, kW;

- **Output Characteristics**

Connect the input side of the AC/DC source to the power grid, so that the input voltage is within the operating voltage range of the power supply, and the output side is connected to a pure resistive load. Set the output voltage value to make the power supply work within the rated output voltage range, read and record the output measurement value, efficiency, and PF value on the power analyzer.

- **Load Regulation**

Connect the input side of the AC/DC source to the power grid, so that the input voltage is within the operating voltage range of the power supply, and the output side is connected to a pure resistive load. Set the output voltage value to make the power supply work within the rated output voltage range, read and record the output voltage measurement value on the power analyzer when there is no-load and On-load, the load adjustment rate is obtained by the following formula:

$$L = \frac{|U_0 - U_1|}{U_1} \times 100\%$$

And:

L——Voltage Accuracy;

U_1——On-load voltage, V;

U_0——No-load voltage, V;

Un——Rated voltage, V;

- **Voltage THD**

Connect the input side of the AC/DC source to the power grid, so that the input voltage is within the operating voltage range of the power supply, and the output side is connected to a pure resistive load. Set the output voltage value to make the power supply work within the rated output voltage range, read and record the output voltage measurement value on the power analyzer when there is no-load and On-load, and set the frequency value as:50Hz/1000Hz/2000Hz. Read and record the various voltage THD on the power analysis.

- **Ripple Test**

The ripple voltage is the superposition of all AC voltage components at the output of the power supply. When the power supply is DC output, the output side is connected to a pure

resistive load, so that the output voltage and output current reach the maximum value specified by the product, read and record the AC voltage indication value, and take the maximum value in the test.

The ripple coefficient is obtained by the following formula:

$$Y = \frac{U_{rms}}{U_N} \times 100\%$$

And:

Y ——Ripple coefficient;

$U_{mr\,s}$——RMS of voltage ripple, V;

U_N ——Rated Voltage, V;

- **Harmonic Test**

Connect the input side of the AC/DC source to the power grid, so that the input voltage is within the operating voltage range of the power supply, and the output side is connected to a pure resistive load. Set the output voltage value to make the power supply work within the rated output voltage range, and enable the harmonic editing function, set the superimposition value of each harmonic, read and record the measured value of the harmonic component on the power analysis, record the oscilloscope waveform.

- **Inter-harmonic Test**

Connect the input side of the AC/DC source to the power grid, so that the input voltage is within the operating voltage range of the power supply, and the output side is connected to a pure resistive load. Set the output voltage value to make the power supply work within the rated output voltage range, and enable the inter-harmonic editing function, set the frequency and harmonic superimposition value, read and record the inter-harmonic component measurement value and THD on the power analysis, record Oscilloscope waveform.

- **Voltage Drop Change**

Connect the input side of the AC/DC source to the power grid, so that the input voltage is within the operating voltage range of the power supply, and the output side is connected to a pure resistive load. In the sequence mode, set the output voltage value, duration and change rate of each step, read, and record the oscilloscope waveform.

- **Three-phase Unbalanced Output**

Connect the input side of the AC/DC source to the power grid, so that the input voltage is within the operating voltage range of the power supply, and the output side is connected to a pure resistive load. Set the output voltage value to make the power supply work within the rated output voltage range and set the phase angle value, read and record the waveform data on the oscilloscope and power analyzer.

- **Step Load Change**

Connect the input side of the AC/DC source to the power grid, so that the input voltage is within the operating voltage range of the power supply, and the output side is connected to a pure resistive load through an AC contactor. When the AC power is output to 200V, control the AC contactor to on/off, and record the oscilloscope waveform.

The output power calculation is obtained by the following formula:

$$P = \frac{(U_N)2}{R} \times 3 = \frac{40000}{5.2} \times 3 = 23.08KW$$

And:

P ——Total output power at 200V,， kW；

U_N——Set voltage value， V；

R ——Resistance value， Ω；

- **Voltage Offset Test**

Connect the input side of the AC/DC source to the power grid, so that the input voltage is within the operating voltage range of the power supply, and the output side is connected to a pure resistive load. Set the output voltage/current offset to make the power supply work within the rated output voltage range, read and record the offset measurement values on the power analyzer and the power supply.

- **TTL Signal Trigger**

Connect the input side of the AC/DC source to the power grid, so that the input voltage is within the operating voltage range of the power supply. Set the output voltage, phase angle and frequency to make the power supply operating within the rated output voltage range, read and record the oscilloscope Waveform.

- ****Waveform Injection**

Connect the input side of the AC/DC source to the power grid, so that the input voltage is within the operating voltage range of the power supply. Within the rated voltage range, use the panel or signal generator to set the output parameters of the AC and DC sources. Read and record the oscilloscope waveform.

Note: This function is customized by users, only for reference.

- **Protective Function**

1. Adjust the output voltage above the rated voltage specified by the power supply, and the voltage output will be limited by power supply.

2. Adjust the input voltage above the rated voltage specified by the power supply, and the power supply will immediately cut off the output and give an alarm.

3. Adjust the load or output voltage so that the output current is greater than 1.2 times the rated value. The power supply will immediately start the protection function and cut off the output.

4. Adjust the temperature setting value of the software program. When the current measured temperature is greater than 10% of the software setting temperature, the power supply will immediately cut off the output and give an alarm.

- **Log Function**

The user can be view log record through setting panel.

- **Clock Function**

The user can view and set the current time, year, month, day, hour, and minute through setting panel.

- **LCD Display Test**

In the setting and running state, there is no flicker and flower on LCD screen.

6.2 Test Record Form

Please refer to the KGS test report.

Chapter 7 Equipment Maintenance and Repair

7.1 Equipment Maintenance

7.1.1 Equipment operating environment

7.1.2 Equipment maintenance

7.2 Equipment Repair

7.2.1 Equipment self-test

7.2.2 Maintenance service

7.2.3 Equipment returns

7.1 Equipment Maintenance

Please be careful of the maintenance environment of equipment. Bridge Technology has no liability for failures caused by breaking equipment rules.

7.1.1 Equipment operating environment

- The equipment is used indoors, and the operating temperature is not higher than 40 ° C and not lower than 0 ° C.
- The temperature of equipment storage is not higher than 85 ° C and not lower than -25 °C.
- The equipment should be installed indoor with a maximum relative humidity of 20 to 90% RH (no condensation).
- To avoid corrosion of electrical components, the equipment should be isolated from harmful gases such as acids and alkalis which damages the insulation.
- For ventilation, the equipment should be kept more than 600mm away from the wall or other equipment.
- No violent vibrations and shocKGS during equipment installation.
- The equipment should be kept away from flammable and explosive substances.
- There should be no strong electromagnetic field interference around the equipment.

7.1.2 Equipment maintenance

- No dust accumulation on the equipment and the ground must be clean.
- Cleaning: To prevent dust or moisture which affects the performance of the equipment, keep the surface clean and dry. Please use a soft, lint-free cleaning cloth to clean the outside. Do not use any cleaner.

7.2 Equipment Repair

7.2.1 Equipment self-test

- Whether inlet/outlet and terminal block of the equipment are connected.
- Whether inlet/outlet lines of the equipment are damaged or exposed, and with good insulation.
- Whether the ground wire is good, no looseness, and not overlapped with other metals.
- Whether it sounds normal or not excessively heated of the wiring when the equipment is running.

CAUTIOUS

Do not disassemble the equipment. If there is any problem, please contact the agent or Bridge Technology. Bridge Technology has no liability for equipment failure caused by
self-assembly.

7.2.2 Maintenance service

If the purchased equipment failure during the warranty period, Bridge Technology will repair the equipment according to the specific information provided by the customer.

Contact information is on Page 05.

7.2.3 Equipment returns

If the failure is confirmed by itself rather than the connection problem, please return the power supply to Bridge Technology to repair.

- Please attach a note to the packing, indicating the specific description of the failure, model, and owner of the power supply.
- Please place the power supply in the original load carriers, properly fill the cushioning material, and ensure that the packing box is firm.

Chapter 8 Programming

8.1 Command Format

8.1.1 Parameters data type

8.s1.2 Command parameters/Return value units

8.1.3 Command format

8.2 Command Sets

8.2.1 Common commands

8.2.2 SCPI and panel comparison

8.3 Example

8.1 Command Format

The parameter data types, parameters and the value range and formats of the programmed commands of the power supply are introduced in this chapter. The user shall carefully read the content of the following chapters before developing the control operations.

8.1.1 Parameters data type

Parameters Data Type	Effective Parameters
<boolean>	1 or 0
<NRf1...n>	Floating Point, 0/positive/negative floating points
<NRf>	Floating Point, 0/positive/negative floating points
<string>	Character strings

8.1.2 Command parameters/Return valve units

Physical Qty.	Unit
Voltage	V (Volt)
Current	A (Ampere)
Active Power	KW (Kilowatt)
Reactive Power	KVA (Kilovolt-ampere)
Time	mS (Millisecond)

8.1.3 Command format

The command set of the KGS series are divided into the following two command formats:

- <*>command characters<?> e.g., *IDN? or Remote?
- Command characters_<value> e.g., POWER 1 or SET: VOLT 100.0

8.2 Command Sets

8.2.1 Common commands

Commands	Return Value	Description
*IDN	Return: KGS-AC***-*** Firmware Versioin 1.0	Return the information of equipment
*RST	None	Fault Rest
Remote?	Remote,1/0	Inquire the status of Remote/Local. It will return 1 if working in Remote mode, else return 0.
FAULT?	FAULT,1/0	Check if there is a fault. It will return 1 if fault occurred, else return 0.
POWER ON/OFF	None	Turn ON/OFF the switch of grid side.
OUTPUT ON/OFF	None	Enable/Disable the output of power supply
POWER:STAT?	POWER:STAT,1/0	Return status of switch of grid side 1:ON 0:OFF
OUTPUT:STAT?	OUTPUT:STAT,1/0	Return status of output of power supply 1:ON 0:OFF
OVP <NRf>	None	Set the value of Over Voltage Protection
OCP <NRf>	None	Set the value of Over Current Protection
OPP <NRf>	None	Set the value of Over Power Protection
OVP?	OVP <,NRf>	Inquire the value of Over Voltage Protection
OCP?	OCP <,NRf>	Inquire the value of Over Current Protection
OPP?	OPP <,NRf>	Inquire the value of Over Power Protection
LIMIT:CUR <NRf>	None	Set the value of limitation for current CF=1.414

LIMIT:CUR?	LIMIT: CUR<,NRf>	Inquire the value of limitation for current CF=1.414
MODE CV/CC	None	Set the mode of output to CV or CC
MODE?	MODE 1/0	Return mode of output 1:CC 0:CV
MODES SEQ/ATI	None	Set Input mode of reference value SEQ:0 Software input ATI:1 Analog input
MODES?	MODES 1/0	Return Input mode of reference value 1:ATI 0:SEQ
MODEA AC/DC	None	Set the AC or DC mode of output. AC or DC
MODEA?	MODEA 1/0	Return the AC or DC mode of output 1:DC 0:AC
SET:PHASEA <NRf>	None	Set the value of phase of A
SET:AMPA <NRf>	None	Set the value of amplitude of A
SET:PHASEB <NRf>	None	Set the value of phase of B
SET:AMPB <NRf>	None	Set the value of amplitude of B
SET:PHASEC <NRf>	None	Set the value of phase of C
SET:AMPC <NRf>	None	Set the value of amplitude of C
SET:FREQ?	SET: FREQ<,NRf>	Inquire the value of frequency
SET:PHASEA?	SET: PHASEA<,NRf>	Inquire the value of phase of A
SET: AMPA?	SET: AMPA<,NRf>	Inquire the value of amplitude of A
SET:PHASEB?	SET: PHASEB<,NRf>	Inquire the value of phase of B
SET:AMPB?	SET: AMPB<,NRf>	Inquire the value of amplitude of B
SET:PHASEC?	SET: PHASEC<,NRf>	Inquire the value of phase of C
SET:AMPC?	SET: AMPC<,NRf>	Inquire the value of amplitude of C

SET <NRf1><,NRf2><,NRf3><,NRf4><,NRf5><,NRf6><,NRf7>	None	Set the values of following parameters for one time: Frequency; phase of A; amplitude of A; phase of B; amplitude of B; phase of C; amplitude of C;
SET?	SET <,NRf1><,NRf2><,NRf3><,NRf4><,NRf5><,NRf6><,NRf7>	Inquire the values of following parameters for one time: Frequency; phase of A; amplitude of A; phase of B; amplitude of B; phase of C; amplitude of C;
SET APPLY	None	Validate the parameters that have been set.
OFFSET:A <NRf>	None	Set the dc offset of A
OFFSET:B <NRf>	None	Set the dc offset of B
OFFSET:C <NRf>	None	Set the dc offset of C
OFFSET <NRf1><,NRf2><,NRf3>	None	Set the dc offset of A~C
OFFSET:A?	OFFSET:A<NRf>	Inquire the dc offset of A
OFFSET:B?	OFFSET:B<NRf>	Inquire the dc offset of B
OFFSET:C?	OFFSET:C <NRf>	Inquire the dc offset of C
OFFSET?		Inquire the dc offset of A~C
OFFSET APPLY	None	Validate the offset parameters that have been set.
VOLT:A?	VOLT:A<NRf>	Measure the voltage of output A
VOLT:B?	VOLT:B<NRf>	Measure the voltage of output B
VOLT:C?	VOLT:C<NRf>	Measure the voltage of output C
VOLT?	VOLT<NRf1><,NRf2><,NRf3><,NRf4><,NRf5><,NRf6>	Measure the voltage of output A~C
CUR:A?	CUR:A<,NRf>	Measure the current of output A

CUR:B?	CUR:B<,NRf>	Measure the current of output B
CUR:C?	CUR:C<,NRf>	Measure the current of output C
CUR?	CUR<,NRf1><,NRf2><,NRf3>	Measure the current of output A~C
POW:A?	POW:A<,NRf>	Measure the power of output A
POW:B?	POW:B<,NRf>	Measure the power of output B
POW:C?	POW:C<,NRf>	Measure the power of output C
POW?	POW<,NRf1><,NRf2><,NRf3>	Measure the power of output A~C
VOLTDC:A?	VOLTDC:A<NRf>	Measure the dc voltage of output A
VOLTDC:B?	VOLTDC:B<NRf>	Measure the dc voltage of output B
VOLTDC:C?	VOLTDC:C<NRf>	Measure the dc voltage of output C
VOLTDC?	VOLTDC<NRf1><,NRf2><,NRf3>	Measure the dc voltage of output A~C
CURDC:A?	CURDC:A<NRf>	Measure the dc current of output A
CURDC:B?	CURDC:B<NRf>	Measure the dc current of output B
CURDC:C?	CURDC:C<NRf>	Measure the dc current of output C
CURDC?	CRUDC <NRf1><,NRf2><,NRf3>	Measure the dc current of output A~C
FREQ:A?	FREQ:A<NRf>	Inquire the frequency of output A
FREQ:B?	FREQ:B<NRf>	Inquire the frequency of output B
FREQ:C?	FREQ:C<NRf>	Inquire the frequency of output C
FREQ?	FREQ<NRf1><,NRf2><,NRf3>	Inquire the frequency of output A~C
MEAS?	MEAS<,NRf1><,NRf2><,NRf3><,NRf4><,NRf5><,NRf6>……	Inquire all measured parameters of power supply.
FCODE?	FCODE<,NRf1><,NRf2><,NRf3><,NRf4><,NRf5><,NRf6>	Inquire fault code if happened.

***Unit of voltage: V; Unit of voltage: A; Unit of power: kW; Unit of time: mS**

8.2.2 SCPI and panel comparison

1. (Hardware limits)

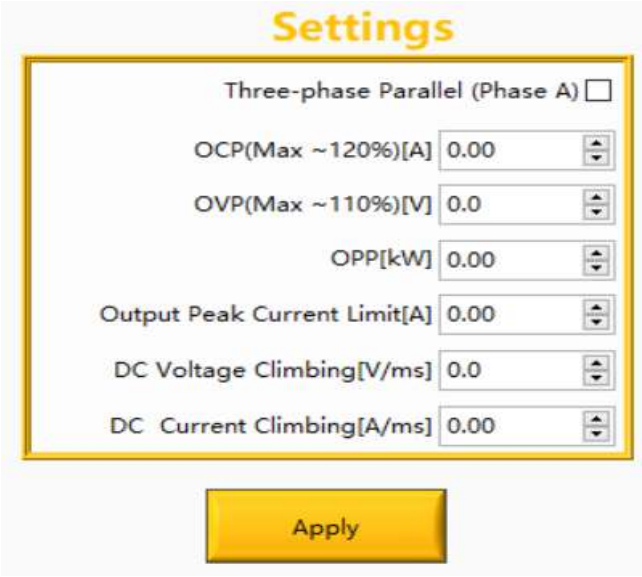

Figure 8-1

Commands	Return Value	Description
OVP <NRf>	None	Set the value of Over Voltage Protection
OCP <NRf>	None	Set the value of Over Current Protection
OPP <NRf>	None	Set the value of Over Power Protection
OVP?	OVP <,NRf>	Inquire the value of Over Voltage Protection
OCP?	OCP <,NRf>	Inquire the value of Over Current Protection
OPP?	OPP <,NRf>	Inquire the value of Over Power Protection
LIMIT:CUR <NRf>	None	Set the value of limitation for current ;CF=1.414
LIMIT:CUR?	LIMIT:CUR <,NRf>	Inquire the value of limitation for current; CF=1.414

2. (Sequence)

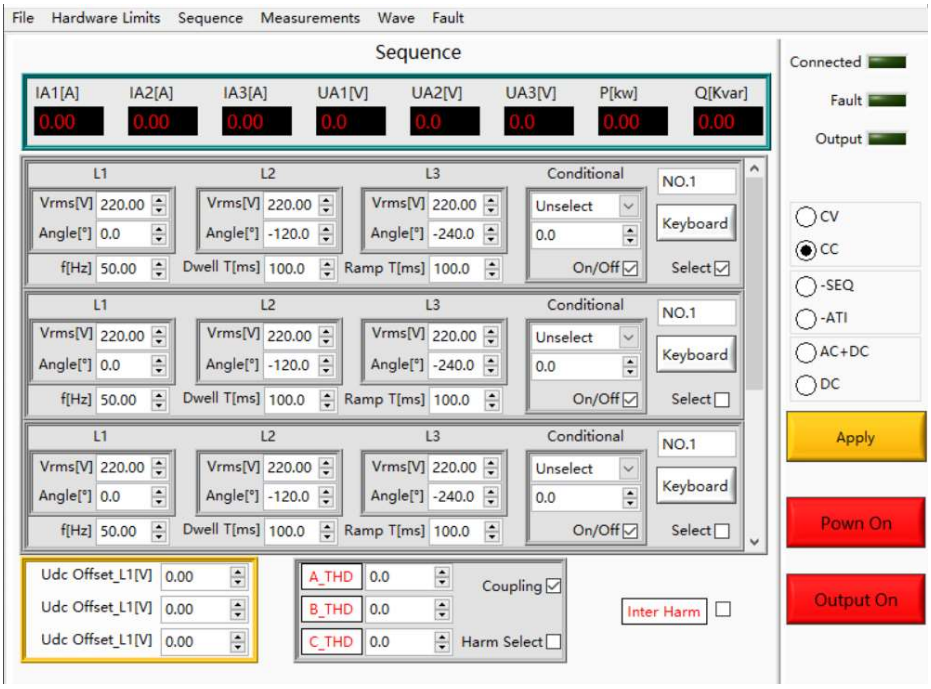

Figure 8-2

Commands	Return Value	Description
POWER ON/OFF	None	Turn ON/OFF the switch of grid side.
OUTPUT ON/OFF	None	Enable/Disable the output of power supply
POWER:STAT?	POWER:STAT,1/0	Return status of switch of grid side 1:ON 0:OFF
OUTPUT:STAT?	OUTPUT:STAT,1/0	Return status of output of power supply 1:ON 0:OFF
SEQ CLEAR	None	Clear the sequence's parameters in sequence mode and the current step return to 1
SEQ INC	None	Go to next step of sequence in sequence mode
SEQ:FREQ <NRf>	None	Set output frequency inactivated step in sequence mode
SEQ:PHASEA <NRf>	None	Set the phase of output A in activated step in sequence mode

SEQ: AMPA <NRf>	None	Set the amplitude of output A in activated step in sequence mode
SEQ:PHASEB <NRf>	None	Set the phase of output B in activated step in sequence mode
SEQ: AMPB <NRf>	None	Set the amplitude of output B in activated step in sequence mode
SEQ:PHASEC <NRf>	None	Set the phase of output C in activated step in sequence mode
SEQ: AMPC <NRf>	None	Set the amplitude of output C in activated step in sequence mode
SEQ:SWT <NRf>	None	Set switch time
SEQ:DUT <NRf>	None	Set duration
SEQ:CONDSEL NONE/A/B/C	None	Set the selection of the type for condition :NONE/A/B/C
SEQ:CONDVAL<NRf>	None	Set the condition value for phase
SEQ:OUTPUT ON/OFF	None	Enable or Disable the output
SEQ<NRf1><,NRf2><,NRf3><,NRf4><,NRf5><,NRf6><,NRf7><,NRf8><,NRf9><,NRf11><,NONE/A/B/C><,ON/OFF>		Set the values of following parameters for one time: duration; switch time; output frequency; the phase of output A; the amplitude of output A; the phase of output B; the amplitude of output B; the phase of output C; the amplitude of output C; the condition value; the selectioncondtion; the cmd of output
SEQ:LAB<NRf>		Set the sequence step number
SEQ:LAB?	SEQ:LAB<,NRf>	Inquire the sequence number of current step
SEQ:FREQ?	SEQ:FREQ<,NRf>	Inquire output frequency have been set inactivated step in sequence mode
SEQ:PHASEA?	SEQ: PHASEA<,NRf>	Inquire the phase of output A have been set inactivated step in sequence mode

SEQ:AMPA?	SEQ: AMPA<,NRf>	Inquire the amplitude of output A in activated step in sequence mode
SEQ:PHASEB?	SEQ: PHASEB<,NRf>	Inquire the phase of output B have been set inactivated step in sequence mode
SEQ:AMPB?	SEQ: AMPB<,NRf>	Inquire the amplitude of output B in activated step in sequence mode
SEQ:PHASEC?	SEQ: PHASEC<,NRf>	Inquire the phase of output C have been set inactivated step in sequence mode
SEQ:AMPC?	SEQ: AMPC<,NRf>	Inquire the amplitude of output C in activated step in sequence mode
SEQ:SWT?	SEQ:SWT<,NRf>	Inquire switch time
SEQ:DUT?	SEQ: DUT<,NRf>	Inquire duration
SEQ:CONDSEL?	SEQ: CONDSEL ,0/1/2/3	Inquire the selection of the type for condition; 0:NONE 1:A 2:B 3:C
SEQ:CONDVAL?	SEQ:CONDVAL<,NRf>	Inquire the condition value for phase
SEQ:OUTPUT?	SEQ:OUTPUT ,1/0	Inquire the cmd of output; 1:ON 0:OFF
SEQ?	SEQ<NRf1><,NRf2><,NRf3><,NRf4><,NRf5><,NRf6><,NRf7><,NRf8><,NRf9><,NRf10><,NRf11><,NONE/A/B/C><,ON/OFF>	Inquire the values of following parameters for one time: LAB; duration; switch time; output frequency; the phase of output A; the amplitude of output A; the phase of output B; the amplitude of output B; the phase of output C; the amplitude of output C; the condition value; the selectioncondtion; the cmd of output

MSEQ?	MSEQ<NRf1><,NRf2><,NRf3><,NRf4><,NRf5><,NRf6><,NRf7><,NRf8><,NRf9><,NRf10><,NRf11><,NONE/A/B/C><,ON/OFF>	Inquire all the parameters in Sequence one time. In turn, the following is: first: LAB; duration; switch time; output frequency; the phase of output A; the amplitude of output A; the phase of output B; the amplitude of output B; the phase of output C; the amplitude of output C; the condition value; the selectioncondtion; the cmd of output Second : LAB; duration; switch time; output frequency ; the phase of output A; the amplitude of output A; the phase of output B; the amplitude of output B; the phase of output C; the amplitude of output C; the condition value; the selectioncondtion; the cmd of output ……..
SEQ APPLY	None	Validate the parameters that have been set in sequence mode.

3. (Harmonic)

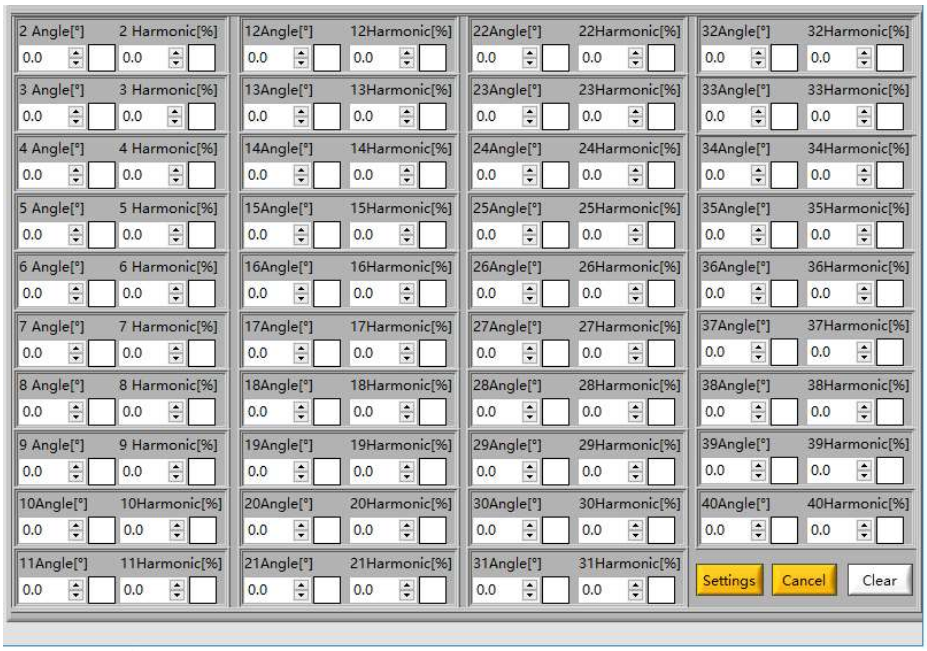

Figure 8-3

Commands	Return Value	Description
HARM <NRf1><,NRf2><,NRf3><, NRf4><, NRf5><,NRf6><, NRf7>	None	Set second harmonic parameters: Harmonic order; phase of a; ratio of a; phase of b; ratio of b; phase of c; ratio of c;
HARM?	HARM<NRf1><,NRf2><, NRf3><, NRf4><, NRf5><,NRf6><, NRf7>; HARM:<NRf1><,NRf2><, NRf3><, NRf4><, NRf5><,NRf6><, NRf7>; …….	Inquire 2-40th harmonic parameters: Harmonic order; phase of a; ratio of a; phase of b; ratio of b; phase of c; ratio of c;
HARM APPLY	None	Validate the parameters that have been set
HARM CLEAR	None	Clear harmonic setting parameters

1. Inter Harmonic Setting

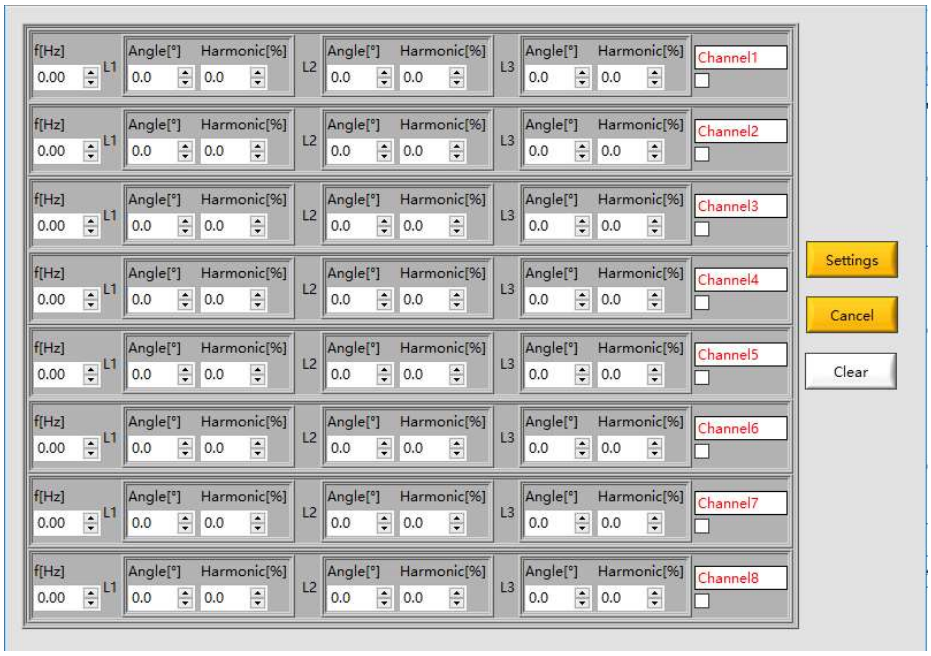

Figure 8-4

Commands	Return Value	Description
IHARM <NRf1><,NRf2><, NRf3><, NRf4><,NRf5><, NRf6><, NRf7> , NRf8>	None	Set inter harmonic parameters of Channel Channel; Frequency; phase of a; ratio of a; phase of b; ratio of b; phase of c; ratio of c;
IHARM?	IHARM <NRf1><,NRf2><, NRf3><, NRf4><,NRf5><, NRf6><, NRf7> ,<NRf8>	Inquire inter harmonic parameters of Channel Channel; Frequency; phase of a; ratio of a; phase of b; ratio of b; phase of c; ratio of c; … Channel; Frequency; phase of a; ratio of a;

		phase of b; ratio of b; phase of c; ratio of c;
IHARM APPLY	None	Validate the parameters that have been set
IHARM CLEAR	None	Clearing inter harmonic parameter setting

8.3 Example

1) Query information

*IDN

KGS-AC***-*** Firmware Versioin 1.0

Remote?

1

2) Set the protection value

OVP 300

OVP?

OVP300.00

OCP 225

OCP?

OCP225.00

3) Set hardware limits

LIMIT:CUR 200

LIMIT:CUR?

LIMIT:CUR200.00

4) Check for faults

FAULT?

FAULT0 //No faults

FAULT?

FAULT1 //Got a fault

OUTPUTOFF

POWEROFF

*RST //reset the unit

5) Inquire Measure

VOLT:A?;VOLT:B?;VOLT:C?

VOLT:A220.00;VOLT:B220.00;VOLT:C220.00;

6) Power up in normal mode

MODE CV

SET:FREQ 50

SET:PHASEA 0

SET:AMPA 220

SET:PHASEB-120

SET:AMPB 220

SET:PHASEC -240

SET:AMPC 220

SET?

SET50.00,0.00,220.00,-120.00,220.00,-240,220

SET APPLY

POWER ON

POWER:STAT?

POWER:STAT1

OUTPUT ON

OUTPUT:STAT?

OUTPUT:STAT1

VOLT:A?

VOLT:A 220.00

CUR:A?

CUR:A10.00

POW:A?

POW:A 2.20

7) Power up in sequence mode

SEQ:LAB?

SEQ:LAB1

SEQ:FREQ 50

SEQ:PHASEA 0

SEQ:AMPA 220

SEQ:PHASEB -120

SEQ:AMPB 220

SEQ:PHASEC -240

SEQ:AMPC 220

SEQ:SWT 100

SEQ:DUT 100

SEQ:CONDSEL NONE

SEQ:CONDVAL 0

SEQ:OUTPUT ON

SEQ?

SEQ1.00,100.00,100.00,50.00,0.00,220.00,-120.00,220.00,-240.00,220.00,0.00,0.00,1.0
0

SEQ:INC

SEQ:LAB?

SEQ:LAB2

SEQ:FREQ 50

SEQ:PHASEA 0

SEQ:AMPA100

SEQ:PHASEB -120

SEQ:AMPB 100

SEQ:PHASEC -240

SEQ:AMPC 100

SEQ:SWT 100

SEQ:DUT 100

SEQ:CONDSEL NONE

SEQ:CONDVAL 0

SEQ:OUTPUT ON

SEQ?

SEQ2.00,100.00,100.00,50.00,0.00,100.00,-120.00,100.00,-240.00,100.00,0.00,0.00,1.0
0

SEQ:APPLY

POWER ON

POWER:STAT?

POWER:STAT1

OUTPUT ON

OUTPUT:STAT?

OUTPUT:STAT1

VOLT?

VOLT*.*,*.*,*.*

CUR?

CUR*.*,*.*,*.*

POW?

POW*.*,*.*,*.*